Hardware User Manual

EA-USER-M

HARDWARE USER MANUAL

AUTOMATIONDIRECT.com

Please include the Manual Number and the Manual Issue, both shown below, when communicating with Technical Support regarding this publication.

Manual Number: EA-USER-M
Issue: 3rd Ed. Rev A
Issue Date: 06/20

Publication History		
Issue	**Date**	**Description of Changes**
First Edition	11/05	Original
Rev. A	01/06	Added chapters and content.
Rev. B	04/06	Added chapters 7-9 and appendix B.
Rev. C	08/07	Added AB EtherNet/IP, minor corrections, and content added.
Second Edition	02/08	Added Recipe backup/restore, Omron Ethernet & Siemens
Rev. A	07/08	Added Mitsubishi drivers, minor corrections
Rev. B	10/08	Added CLICK and Siemens S7-200 Ethernet drivers.
Rev. C	04/09	Added tightening torque, battery note, enclosure and environment specs. Added Remote Access feature. Added EA-CF-CARD.
Rev. D	10/09	Added EA7-T6CL-R and EA7-T6CL
Rev. E	07/10	Revised Chemical Compatibility table. Added P3000, added USB troubleshooting. minor corrections
Rev. F	05/11	Added new replacement bulbs
Rev. G	08/14	Revised cable diagrams, Added Log File Naming. Added CSA approval information
Rev. H	05/18	Revised PLC compatibility tables
Third Edition	05/20	Added Appendix D - Security Considerations for Control Systems Networks
Rev A	06/20	Revised Appendix D

WARNING

Thank you for purchasing automation equipment from **Automationdirect.com®**, doing business as, **AutomationDirect**. We want your new automation equipment to operate safely. Anyone who installs or uses this equipment should read this publication (and any other relevant publications) before installing or operating the equipment.

To minimize the risk of potential safety problems, you should follow all applicable local and national codes that regulate the installation and operation of your equipment. These codes vary from area to area and usually change with time. It is your responsibility to determine which codes should be followed, and to verify that the equipment, installation, and operation is in compliance with the latest revision of these codes.

At a minimum, you should follow all applicable sections of the National Fire Code, National Electrical Code, and the codes of the National Electrical Manufacturer's Association (NEMA). There may be local regulatory or government offices that can also help determine which codes and standards are necessary for safe installation and operation.

Equipment damage or serious injury to personnel can result from the failure to follow all applicable codes and standards. We do not guarantee the products described in this publication are suitable for your particular application, nor do we assume any responsibility for your product design, installation, or operation.

Our products are not fault-tolerant and are not designed, manufactured or intended for use or resale as on-line control equipment in hazardous environments requiring fail-safe performance, such as in the operation of nuclear facilities, aircraft navigation or communication systems, air traffic control, direct life support machines, or weapons systems, in which the failure of the product could lead directly to death, personal injury, or severe physical or environmental damage ("High Risk Activities"). **AutomationDirect** specifically disclaims any expressed or implied warranty of fitness for High Risk Activities.

For additional warranty and safety information, see the Terms and Conditions section of our catalog. If you have any questions concerning the installation or operation of this equipment, or if you need additional information, please call us at 770-844-4200.

This publication is based on information that was available at the time it was printed. At **AutomationDirect** we constantly strive to improve our products and services, so we reserve the right to make changes to the products and/or publications at any time without notice and without any obligation. This publication may also discuss features that may not be available in certain revisions of the product.

Trademarks

This publication may contain references to products produced and/or offered by other companies. The product and company names may be trademarked and are the sole property of their respective owners. **AutomationDirect** disclaims any proprietary interest in the marks and names of others.

Copyright 2005 - 2020, Automationdirect.com® Incorporated
All Rights Reserved

No part of this manual shall be copied, reproduced, or transmitted in any way without the prior, written consent of **Automationdirect.com® Incorporated**. **AutomationDirect** retains the exclusive rights to all information included in this document.

ADVERTENCIA

Gracias por comprar equipo de automatización de **Automationdirect.com**®. Deseamos que su nuevo equipo de automatización opere de manera segura. Cualquier persona que instale o use este equipo debe leer esta publicación (y cualquier otra publicación pertinente) antes de instalar u operar el equipo.

Para reducir al mínimo el riesgo debido a problemas de seguridad, debe seguir todos los códigos de seguridad locales o nacionales aplicables que regulan la instalación y operación de su equipo. Estos códigos varian de área en área y usualmente cambian con el tiempo. Es su responsabilidad determinar cuales códigos deben ser seguidos y verificar que el equipo, instalación y operación estén en cumplimiento con la revisión mas reciente de estos códigos.

Como mínimo, debe seguir las secciones aplicables del Código Nacional de Incendio, Código Nacional Eléctrico, y los códigos de (NEMA) la Asociación Nacional de Fabricantes Eléctricos de USA. Puede haber oficinas de normas locales o del gobierno que pueden ayudar a determinar cuales códigos y normas son necesarios para una instalación y operación segura.

Si no se siguen todos los códigos y normas aplicables, puede resultar en daños al equipo o lesiones serias a personas. No garantizamos los productos descritos en esta publicación para ser adecuados para su aplicación en particular, ni asumimos ninguna responsabilidad por el diseño de su producto, la instalación u operación.

Nuestros productos no son tolerantes a fallas y no han sido diseñados, fabricados o intencionados para uso o reventa como equipo de control en línea en ambientes peligrosos que requieren una ejecución sin fallas, tales como operación en instalaciones nucleares, sistemas de navegación aérea, o de comunicación, control de tráfico aéreo, máquinas de soporte de vida o sistemas de armamentos en las cuales la falla del producto puede resultar directamente en muerte, heridas personales, o daños físicos o ambientales severos ("Actividades de Alto Riesgo"). **Automationdirect.com** específicamente rechaza cualquier garantía ya sea expresada o implicada para actividades de alto riesgo. Para información adicional acerca de garantía e información de seguridad, vea la sección de Términos y Condiciones de nuestro catálogo. Si tiene alguna pregunta sobre instalación u operación de este equipo, o si necesita información adicional, por favor llámenos al número 770-844-4200 en Estados Unidos. Esta publicación está basada en la información disponible al momento de impresión. En **Automationdirect.com** nos esforzamos constantemente para mejorar nuestros productos y servicios, así que nos reservamos el derecho de hacer cambios al producto y/o a las publicaciones en cualquier momento sin notificación y sin ninguna obligación. Esta publicación también puede discutir características que no estén disponibles en ciertas revisiones del producto.

Marcas Registradas

Esta publicación puede contener referencias a productos producidos y/u ofrecidos por otras compañías. Los nombres de las compañías y productos pueden tener marcas registradas y son propiedad única de sus respectivos dueños. Automationdirect.com, renuncia cualquier interés propietario en las marcas y nombres de otros.

PROPIEDAD LITERARIA 2005 - 2020, AUTOMATIONDIRECT.COM® INCORPORATED
Todos los derechos reservados

No se permite copiar, reproducir, o transmitir de ninguna forma ninguna parte de este manual sin previo consentimiento por escrito de **Automationdirect.com® Incorprated**. **Automationdirect.com** retiene los derechos exclusivos a toda la información incluida en este documento. Los usuarios de este equipo pueden copiar este documento solamente para instalar, configurar y mantener el equipo correspondiente. También las instituciones de enseñanza pueden usar este manual para propósitos educativos.

AVERTISSEMENT

Nous vous remercions d'avoir acheté l'équipement d'automatisation de **Automationdirect.com®**, en faisant des affaires comme, **AutomationDirect**. Nous tenons à ce que votre nouvel équipement d'automatisation fonctionne en toute sécurité. Toute personne qui installe ou utilise cet équipement doit lire la présente publication (et toutes les autres publications pertinentes) avant de l'installer ou de l'utiliser.

Afin de réduire au minimum le risque d'éventuels problèmes de sécurité, vous devez respecter tous les codes locaux et nationaux applicables régissant l'installation et le fonctionnement de votre équipement. Ces codes diffèrent d'une région à l'autre et, habituellement, évoluent au fil du temps. Il vous incombe de déterminer les codes à respecter et de vous assurer que l'équipement, l'installation et le fonctionnement sont conformes aux exigences de la version la plus récente de ces codes.

Vous devez, à tout le moins, respecter toutes les sections applicables du Code national de prévention des incendies, du Code national de l'électricité et des codes de la National Electrical Manufacturer's Association (NEMA). Des organismes de réglementation ou des services gouvernementaux locaux peuvent également vous aider à déterminer les codes ainsi que les normes à respecter pour assurer une installation et un fonctionnement sûrs.

L'omission de respecter la totalité des codes et des normes applicables peut entraîner des dommages à l'équipement ou causer de graves blessures au personnel. Nous ne garantissons pas que les produits décrits dans cette publication conviennent à votre application particulière et nous n'assumons aucune responsabilité à l'égard de la conception, de l'installation ou du fonctionnement de votre produit.

Nos produits ne sont pas insensibles aux défaillances et ne sont ni conçus ni fabriqués pour l'utilisation ou la revente en tant qu'équipement de commande en ligne dans des environnements dangereux nécessitant une sécurité absolue, par exemple, l'exploitation d'installations nucléaires, les systèmes de navigation aérienne ou de communication, le contrôle de la circulation aérienne, les équipements de survie ou les systèmes d'armes, pour lesquels la défaillance du produit peut provoquer la mort, des blessures corporelles ou de graves dommages matériels ou environnementaux («activités à risque élevé»). La société **AutomationDirect** nie toute garantie expresse ou implicite d'aptitude à l'emploi en ce qui a trait aux activités à risque élevé.

Pour des renseignements additionnels touchant la garantie et la sécurité, veuillez consulter la section Modalités et conditions de notre documentation. Si vous avez des questions au sujet de l'installation ou du fonctionnement de cet équipement, ou encore si vous avez besoin de renseignements supplémentaires, n'hésitez pas à nous téléphoner au 770-844-4200.

Cette publication s'appuie sur l'information qui était disponible au moment de l'impression. À la société **AutomationDirect**, nous nous efforçons constamment d'améliorer nos produits et services. C'est pourquoi nous nous réservons le droit d'apporter des modifications aux produits ou aux publications en tout temps, sans préavis ni quelque obligation que ce soit. La présente publication peut aussi porter sur des caractéristiques susceptibles de ne pas être offertes dans certaines versions révisées du produit.

Marques de commerce

La présente publication peut contenir des références à des produits fabriqués ou offerts par d'autres entreprises. Les désignations des produits et des entreprises peuvent être des marques de commerce et appartiennent exclusivement à leurs propriétaires respectifs. **AutomationDirect** nie tout intérêt dans les autres marques et désignations.

Copyright 2005 - 2020, Automationdirect.com® Incorporated
Tous droits réservés

Nulle partie de ce manuel ne doit être copiée, reproduite ou transmise de quelque façon que ce soit sans le consentement préalable écrit de la société **Automationdirect.com® Incorporated**. **AutomationDirect** conserve les droits exclusifs à l'égard de tous les renseignements contenus dans le présent document.

TABLE OF CONTENTS

Chapter 1 - Getting Started

Introduction **1-2**

Conventions Used **1-3**

Mounting Clips – New Style **1-3**

Product Overview **1-4**

Part Number Key – Touch Panels **1-5**

EZTouch Conversion and Mounting **1-6**

EZTouch Touch Panel Cross Reference to *C-more* 1-7

Quick Start Steps **1-9**

Step 1 – Unpack and Inspect 1-9
Step 2 – Assemble Temporary Support Stand 1-10
Step 3 – Install Optional Hardware Accessories 1-11
Step 4 – Become Familiar with Available Communication Ports 1-12
Step 5 – Install the Programming Software and Develop a Project 1-13
Step 6 – Connect Touch Panel to Computer 1-14
Step 7 – Provide Power to the Touch Panel 1-15
Step 8 – Access the Touch Panel Setup Screens 1-16
Step 9 – Choose Touch Panel to Device Protocol & Cables 1-17
Step 10 – Connect Touch Panel to PLC 1-20

Chapter 2 - Specifications

Available Models **2–2**

Model Specifications **2–3**

6″ Base Feature Models 2–4
6″ Full Feature Models 2–5
6″ Obsolete Models 2–6
8″ and 10″ Full Feature Models 2–8

12" and 15" Full Feature Models 2–9
EA7-S6M-R, S6C-R, T6CL-R, S6M, S6C, T6C, T6CL (Dimensions and Ports & Memory Exp.) 2–10
EA7-T8C (Dimensions and Ports & Memory Exp.) 2–12
EA7-T10C (Dimensions and Ports & Memory Exp.) 2–14
EA7-T12C (Dimensions and Ports & Memory Exp.) 2–16
EA7-T15C (Dimensions and Ports & Memory Exp.) 2–18
Mounting Clearances 2–20
Communications Ports 2–21
Audio WAV File Specifications 2–23
Memory Organization 2–24
Handling External Memory Devices 2–25
Power Loss Detection and Power Retention Period 2–26
Data Logging Function and Logging Media 2–26
Data Logging - Memory Device Full 2–26
Chemical Compatibility 2–27

Chapter 3 - Accessories

Accessories 3–2
Accessories Overview 3–3
Accessories at a Glance 3–4
AC/DC Power Adapter – EA-AC 3–5
Expansion Assembly – EA-EXP-OPT 3–9
CF Card Interface Module – EA-CF-IF 3–12
CompactFlash Memory – EA-CF-CARD 3–14
6" Adapter Plate – EA-6-ADPTR 3–17
D-SUB 15-pin 90 degree Comm Port Adapter – EA-ADPTR-4 3–19
D-SUB 15-pin to Terminal Block Adapter – EA-COMCON-3 3–20
Non-glare Screen Covers – EA-xx-COV2, xx = 6, 8, 10, 12 or 15 3–22

Chapter 4 - Installation and Wiring

Safety Guidelines **4–2**

Introduction **4–3**

EA7-S6M-R, S6C-R, T6CL-R, S6M, S6C, T6C, T6CL – Cutout Dimensions **4–4**

EA7-T8C – Cutout Dimensions **4–5**

EA7-T10C – Cutout Dimensions **4–6**

EA7-T12C – Cutout Dimensions **4–7**

EA7-T15C – Cutout Dimensions **4–8**

6" Adapter Plate – EA-6-ADPTR **4–9**

Mounting Clearances **4–11**

Wiring Guidelines **4–12**

Agency Approvals 4–12

Marine Use 4–12

Providing Power to the Touch Panel 4–13

DC Wiring Diagram 4–13

AC Wiring Diagram (EA-AC) 4–14

Chapter 5 - System Setup Screens

Introduction **5–2**

Chapter Organization **5–3**

Accessing the System Setup Screens (no project loaded) **5–4**

Accessing the System Setup Screens (with project loaded) **5–5**

System Setup Screens – Enable Password in Software **5–7**

System Setup Screens Flowchart **5–13**

Main Menu **5–14**

Information Menu **5–15**

Setting Menu **5–19**

Test Menu **5–25**

Memory Menu **5–35**

Chapter 6 - PLC Communications

Introduction **6–2**

DirectLOGIC PLCs Password Protection **6–2**

PLC Communication Cables & Wiring Diagrams **6–5**

AutomationDirect PLCs RS-232C Serial: 6–7
AutomationDirect PLCs RS-422A/RS-485A: 6–10
Direct LOGIC Universal Isolated Network Adapter, p/n FA-ISOCON: 6–16
Direct LOGIC Universal Converter, p/n F2-UNICON: 6–17
RS-422A/RS-485A Multi-Drop Wiring Diagram Examples 6–18
Allen-Bradley: 6–22
GE: 6–27
GE VersaMax Micro: 6–27
Mitsubishi: 6–27
Omron: 6–29
Modicon ModBus RS-232: 6–30
Modicon Micro Series: 6–30
Modicon ModBus with RJ45: 6–30
Siemens: 6–31

Chapter 7 - Maintenance

Project Backup **7–2**

Check Operating Environment **7–2**

Check Operating Voltage **7–2**

Check Status Indicators **7–2**

Check Physical Conditions **7–3**

Run Tests under System Setup Screens **7–3**

Check Memory Usage via System Setup Screens **7–4**

Check/Adjust Display Brightness or Contrast **7–4**

Check Error Log via System Setup Screens **7–4**

Adjust Touch Panel via System Setup Screens **7–4**

Replace Battery Periodically **7–5**

Cleaning the Display Screen **7–5**

Check Project Functionality 7–6
Checks from *C-more* Programming Software 7–6

Chapter 8 - Troubleshooting

Common Problems 8–2
Toubleshooting Flow Chart 8–3
Touch Panel does not Power up 8–4
Display is Blank 8–5
Display is Dim 8–6
No User Program 8–7
No Communications between Panel and PC (Personal Computer) via USB 8–8
USB Driver Troubleshooting 8–10
No Communications between Panel and PC (Personal Computer) via Ethernet . 8–12
No Communications between Panel and PLC 8–16
IP Address in System Setup Screens displays 0.0.0.0 8–19
Difficulty Connecting to the Panel over the Internet (Web server and Remote Access features) 8–20
PLC Protocol Error Codes 8–21
Touch Panel Runtime Errors 8–22
Panel Constantly Displays “Initializing” when Powering up 8–23
Data not Logging Problems 8–23
Loss of Date/Time and Retentive Data 8–24
Electrical Noise Problems 8–24

Chapter 9 - Replacement Parts

Replacement Parts Overview 9–2
Replacement Parts at a Glance 9–2
Battery Replacement & Installation Instructions 9–3
6” Panel Mounting Clip Replacements & Installation 9–5
8-15” Panel Mounting Clip Replacements & Installation 9–6

DC Panel Power Connector Replacement 9–7
AC Power Adapter Connector Replacement 9–7
8-15" Panel Backlight Bulb Replacements & Installation 9–8
6-15" Panel Gasket Replacement & Installation 9–11
8-15" Panel Bezel Replacement & Installation 9–12
6" Adapter Plate Gasket Replacement & Installation 9–14

Appendix A - Panel & PLC Error Code Tables

Introduction A-2
C-more Touch Panel Error Code Table A-3
DirectLOGIC – Panel Error Code PLC-499 Explanation A-5
DirectLOGIC K-Sequence Protocol – PLC Error Code Table A-5
DirectLOGIC ***Direct***NET Protocol – PLC Error Codes A-5
Modbus Protocols Error Code P499 Explanation A-6
AutomationDirect CLICK A-6
AutomationDirect DirectLOGIC - Modbus (Koyo) A-6
Modicon Modbus RTU A-6
Entivity Modbus RTU A-6
DirectLOGIC ECOM Protocol – PLC Error Codes A-6
Productivity3000 Error Code P499 ..... A-7
Allen-Bradley – Panel Error Code PLC-499 Explanation A-8
Allen-Bradley Error Code PLC-499 Message Example: A-8
Allen-Bradley DF1 & DH485 Protocols – PLC Error Code Tables A-9
Allen-Bradley DF1 & DH485 Protocols – PLC Error Code Tables A-10
Allen-Bradley EtherNet/IP Protocol –
Panel Error Code PLC-496, 497 and 498 Explanation A-11
Allen-Bradley – EtherNet/IP Protocol – PLC Error Code Tables
ControlLogix, CompactLogix, & FlexLogix A-12
Allen-Bradley – EtherNet/IP Protocol – PLC Error Code Tables
MicroLogix 1100, 1400 & SLC 5/05, both via native Ethernet port;
MicroLogix 1000, 1100, 1200, 1400, 1500, SLC 5/03/04/05, all via ENI Adapter. A-16
Generic EtherNet IP Protocol – PLC Error Codes A-21

GE 90-30 – Panel Error Code PLC-499 Explanation A-22
Mitsubishi FX Protocol – PLC Error Codes A-32
Omron – Panel Error Code PLC-499 Explanation A-32
Omron Host Link Protocol – PLC Error Code Table A-33
Omron FINS Protocol – PLC Error Code Table A-34
Omron – Panel Error Code P495 Explanation A-37
Omron CS/CJ FINS Ethernet Protocol – PLC Error Code Table A-38
Siemens – Panel Error Code P499 Explanation A-39
Siemens PPI Protocol – PLC Error Code Table A-40
Siemens ISO over TCP Protocol – PLC Error Code Table A-41

Appendix B - Touch Panel Runtime Errors
Introduction B-2
Runtime Errors B-3

Appendix C - Mounting Clips Prior April 2006
Introduction C-2
EA7-S6M-R, S6C-R, S6M, S6C and T6C Original Mounting Clips C-3
EA7-S6M-R, S6C-R, S6M, S6C and T6C Original Mounting Clips C-4
EA7-T8C Original Mounting Clips C-5
EA7-T8C Original Mounting Clips C-6
EA7-T10C Original Mounting Clips C-7
EA7-T10C Original Mounting Clips C-8
EA7-T12C Original Mounting Clips C-9
EA7-T12C Original Mounting Clips C-10
EA7-T15C Original Mounting Clips C-11

Appendix D - Security Considerations for Control System Networks
Security Considerations for Control Systems Networks D-2

Index

GETTING STARTED

CHAPTER 1

In this Chapter...

Introduction **1-2**

Conventions Used **1-3**

Mounting Clips – New Style **1-3**

Product Overview **1-4**

Part Number Key – Touch Panels **1-5**

EZTouch Conversion and Mounting **1-6**

EZTouch Touch Panel Cross Reference to *C-more* 1-7

Quick Start Steps **1-9**

Step 1 – Unpack and Inspect 1-9
Step 2 – Assemble Temporary Support Stand 1-10
Step 3 – Install Optional Hardware Accessories 1-11
Step 4 – Become Familiar with Available Communication Ports 1-12
Step 5 – Install the Programming Software and Develop a Project 1-13
Step 6 – Connect Touch Panel to Computer 1-14
Step 7 – Provide Power to the Touch Panel 1-15
Step 8 – Access the Touch Panel Setup Screens 1-16
Step 9 – Choose Touch Panel to Device Protocol & Cables 1-17
Step 10 – Connect Touch Panel to PLC 1-20

1

Introduction

The Purpose of this Manual

Thank you for purchasing our ***C-more***® Touch Panel family of products. This manual describes AutomationDirect.com's ***C-more*** Touch Panels, their specifications, included components, available accessories and provides you with important information for installation, connectivity and setup. The manual shows you how install, wire and use the products. It also helps you understand how to interface the panels to other devices in a control system.

This user manual contains important information for personnel who will install the touch panels and accessories, and for the personnel who will be programming the panel. If you understand control systems that make use of operating interfaces such as the ***C-more*** touch panels, our user manuals will provide all the information you need to get, and keep your system up and running.

Supplemental Manuals

If you are familiar with industrial control type devices, you may be able to get up and running with just the aide of the Quick Start Guide that is included with each touch panel. You can also refer to the On-line help that is available in the ***C-more*** programming software for more information about programming the panel. The accessories include data sheets that will help with installing the accessories.

Technical Support

We strive to make our manuals the best in the industry. We rely on your feedback to let us know if we are reaching our goal. If you cannot find the solution to your particular application, or, if for any reason you need technical assistance, please call us at:

770–844–4200

Our technical support group will work with you to answer your questions. They are available Monday through Friday from 9:00 A.M. to 6:00 P.M. Eastern Time. We also encourage you to visit our web site where you can find technical and non-technical information about our products and our company.

http://cmore.automationdirect.com

If you have a comment, question or suggestion about any of our products, services, or manuals, please fill out and return the 'Suggestions' card that was included with this manual.

Conventions Used

When you see the "notepad" icon in the left-hand margin, the paragraph to its immediate right will be a special note. The word ***NOTE:*** *in boldface will mark the beginning of the text.*

When you see the "exclamation mark" icon in the left-hand margin, the paragraph to its immediate right will be a warning. This information could prevent injury, loss of property, or even death (in extreme cases). The word WARNING: in boldface will mark the beginning of the text.

Key Topics for Each Chapter

The beginning of each chapter will list the key topics that can be found in that chapter.

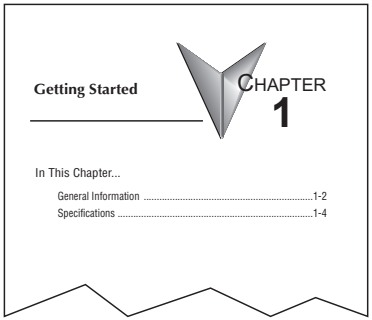
Getting Started

CHAPTER 1

In This Chapter...

General Information 1-2
Specifications 1-4

Mounting Clips – New Style

NOTE: C-more *touch panels shipped prior to approximately* ***April 2006*** *had a slightly different mounting clip design. All of the drawings and illustrations in this issue of the Hardware User Manual are shown with the newer design.* ***Appendix C: Mounting Clips Prior April 2006*** *contains drawings and illustrations of the original designed mounting clips for your reference.*

Product Overview

Some of the features designed into the product to provide excellent hardware and software are listed below.

- Analog touch screen (no touch cell boundaries). The touchscreen is designed to respond to a single touch. If it is touched at multiple points at the same time, an unexpected object may be activated.
- Plenty of memory and methods to get data in/out of the panel
- Overlapping active devices on the touch screen
- 65,536 colors for enhanced graphics
- Screen resolutions up to 1024 X 768 pixels
- Built-in project simulation; test on PC while developing
- Serial RS232, RS422/485 and Ethernet 10/100Base-T communications (Ethernet available on full feature units only.)
- Programming via USB or Ethernet (Ethernet available on full feature units only.)
- Optional AC/DC power adapter (EA-AC)
- Bright backlight bulbs
- Animation of bitmaps and objects
- 4,000 built-in symbols, classic fonts: 6x8, 8x16, 8x32, 8x64, 16x16, 16x32, 16x64, 32x16, 32x32, 32x64, and Windows fonts
- PID face plate, trending, alarming and a recipe database
- Event Manager to trigger actions based on assigned state changes, schedules, PLC tag names, etc. setup in a database environment. The event can also trigger a sound byte, initiate a screen capture, send a data file (FTP), send an E-mail, etc.
- Select unique background screens for each created screen
- Trend Data logging
- Internet Remote Access
- Built-in FTP client/server, E-mail client, and Web server
- Audio output port - stereo, requires amplifier and speaker(s)

Part Number Key – Touch Panels

The *C-more* touch panel part numbers consist of the following key:

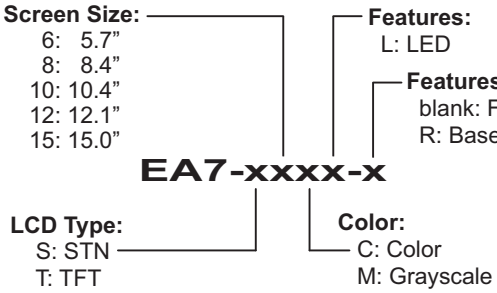

Product label examples:

EA7-T6CL-R

EA7-T15C

Serial Number and Date Code formats:

Serial Number = [Part Number]+[YYMDDFNNN]

YY: Year (05–99 --- e.g. 05 = 2005)
M: Month (1–9, X, Y, Z --- e.g. X = Oct.)
DD: Day (1–31)
F: Manufacturing Site (0–9, A–Z)
NNN: Sequence number for the date listed (000–999)

Date Code = YMMF

Y: Year (0–9 --- e.g. 07 = 2007)
MM: Month (01–12 --- e.g. X = Oct.)
F: Manufacturing Site (0–9, A–Z)

1

EZTouch Conversion and Mounting

C-more panels are a drop-in replacement for **EZTouch** panels from ***AutomationDirect***. They fit the same panel cutout*. The *C-more* software will convert your legacy **EZTouch** project (created with EZTouch Edit ver. 3.1a) automatically with no changes to the project required.** Just open your old **EZTouch** project in the new *C-more* Programming Software, connect the USB cable, and click "Send to Panel". The conversion is automatic and you will benefit immediately from:

- A better looking display
- A brighter screen
- Longer backlight bulb life
- Wider temperature tolerance
- A two year warranty

NOTE: *EZTouch projects most have been created with EZTouch Edit software version 3.1a to assure proper project conversion.*

Now, there are hundreds of new features you may want to take advantage of, but it's nice to know that you can be up and running your existing **EZTouch** project in just a few minutes.

C-more accepts the same PLC communications and networking cables that you are using with **EZTouch**. The 24 VDC power connections accept the same DC wiring that you used for **EZTouch**, and now there is a removable terminal block connector. Only the programming cable is different - you no longer have to buy a proprietary serial cable to program your touch panel. *C-more* uses a standard USB cable or an Ethernet (CAT5) connection for programming.

* If you have an old 6" non-slim bezel **EZTouch** panel you will need our 6" Adapter Plate, part number EA-6-ADPTR, see the chapter on accessories.

** The project conversion utility is a great feature. However the user must take full responsibility in ensuring the conversion works to their satisfaction.

Example of a C-more 6" touch panel mounted into an existing EZTouch non-slim bezel cutout using the C-more 6" adapter plate.

EZTouch Touch Panel Cross Reference to *C-more*

EZTouch			*C-more**
EZTouch 6", grayscale STN (0–45 °C)		*C-more* 6" Adapter	*C-more* 6", grayscale STN (0–50 °C)
EZ-S6M-R	Requires:	EA-6-ADPTR	EA7-S6M-R
EZ-S6M-RS			
EZ-S6M-F	Requires:	EA-6-ADPTR	EA7-S6M (includes Ethernet)
EZ-S6M-FS			

EZTouch			*C-more**
EZTouch 6", 128 Color STN (0–45 °C)		*C-more* 6" Adapter	*C-more* 6", 65,536 Color TFT (0–50 °C)
EZ-S6C-K	Requires:	EA-6-ADPTR	EA7-T6CL-R
EZ-S6C-KS			
EZ-S6C-F	Requires:	EA-6-ADPTR	EA7-T6CL (includes Ethernet)
EZ-S6C-FS			
EZ-S6C-FST			

EZTouch	*C-more**
EZTouch 8", 128 Color STN (0–40 °C)	*C-more* 8", 65,536 Color TFT (0–50 °C)
EZ-S8C-F	EA7-T8C (includes Ethernet)
EZ-S8C-FS	
EZ-S8C-FST	

***Note**: All **C-more** touch panels meet UL type 4X when mounted on a flat surface of a type 4X indoor use only enclosure. Non-FDA*

1

EZTouch Touch Panel Cross Reference to *C-more* (cont'd)

EZTouch	*C-more**
EZTouch 10", 128 Color TFT (0–50 °C)	*C-more* 10", 65,536 Color TFT (0–50 °C)
EZ-S10C-F	EA7-T10C (includes Ethernet)
EZ-T10C-FS	
EZ-T10C-FST	
EZ-T10C-FSE	

EZTouch	*C-more**
No 12" EZTouch available	*C-more* 12", 65,536 Color TFT (0–50 °C)
	EA7-T12C (includes Ethernet)

EZTouch	*C-more**
EZTouch 15", 128 Color TFT (0–45 °C)	*C-more* 15", 65,536 Color TFT (0–50 °C)
EZ-T15C-FS	EA7-T15C (includes Ethernet)
EZ-T15C-FST	
EZ-T15C-FSE	

***NOTE**: All **C-more** touch panels meet UL type 4X when mounted on a flat surface of a type 4X indoor use only enclosure. Non-FDA*

Quick Start Steps

Step 1 – Unpack and Inspect

a.) Unpack the *C-more* Touch Panel from its shipping carton. Included in the carton are the following:

- *C-more* Touch Panel
- cutout template
- mounting clips
- temporary support stand
- DC power connector
- gasket
- Quick Start Guide, p/n EA-QSG

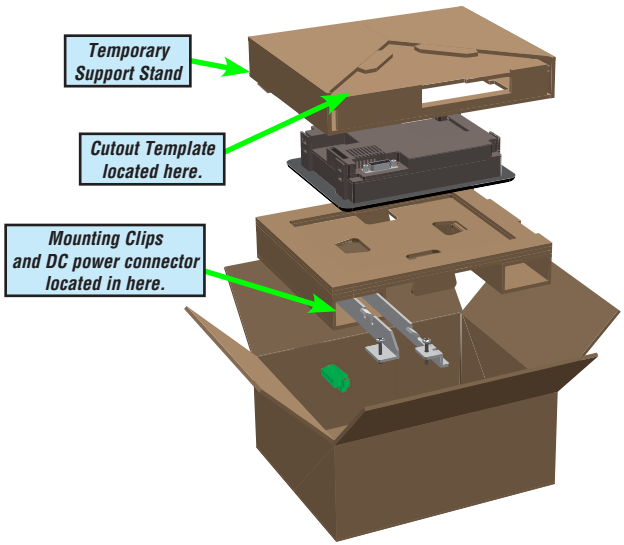

b.) Unpack any accessories that have been ordered, such as: AC/DC Power Adapter, Expansion Assembly, CompactFlash memory, programming cable, communications cable, etc.

c.) Inspect all equipment for completeness. If anything is missing or damaged, immediately call the *AutomationDirect*® returns department @ 1-800-633-0405.

Shipping Carton Contents

Optional Accessories

1

Step 2 – Assemble Temporary Support Stand

6“ & 8” Touch Panel – Temporary Stand

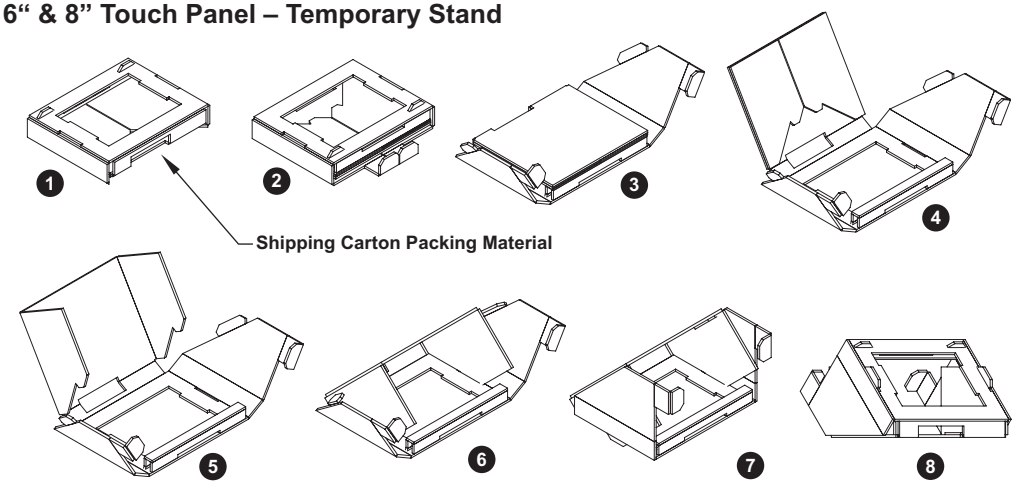

10”, 12“ & 15” Touch Panel – Temporary Stand

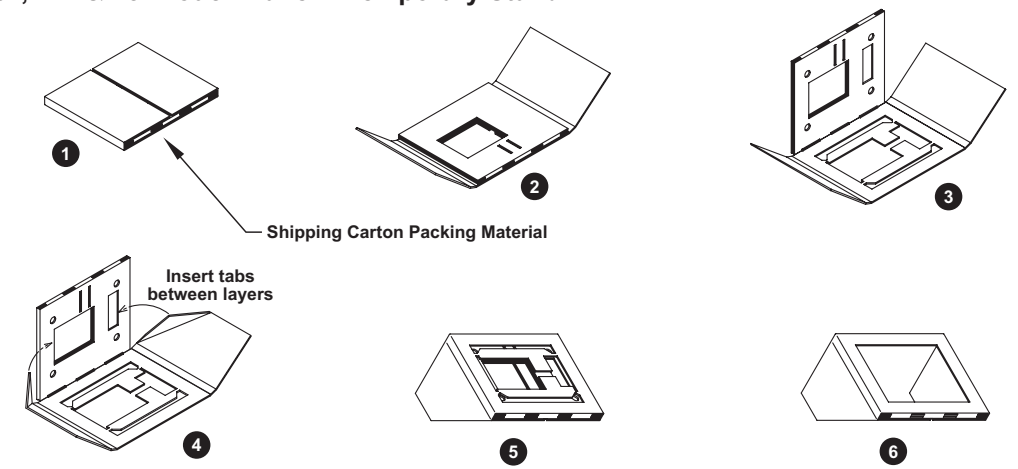

***NOTE**: See **Chapter 4: Installation and Wiring** for **C-more** touch panel installtion information including cutout dimensions and mounting clearances.*

Step 3 – Install Optional Hardware Accessories

***NOTE**: CompactFlash memory card designations – **CF Slot #1** is at the top of the panel and **CF Slot #2** is the CF Card Interface Module, p/n EA-CF-IF.*

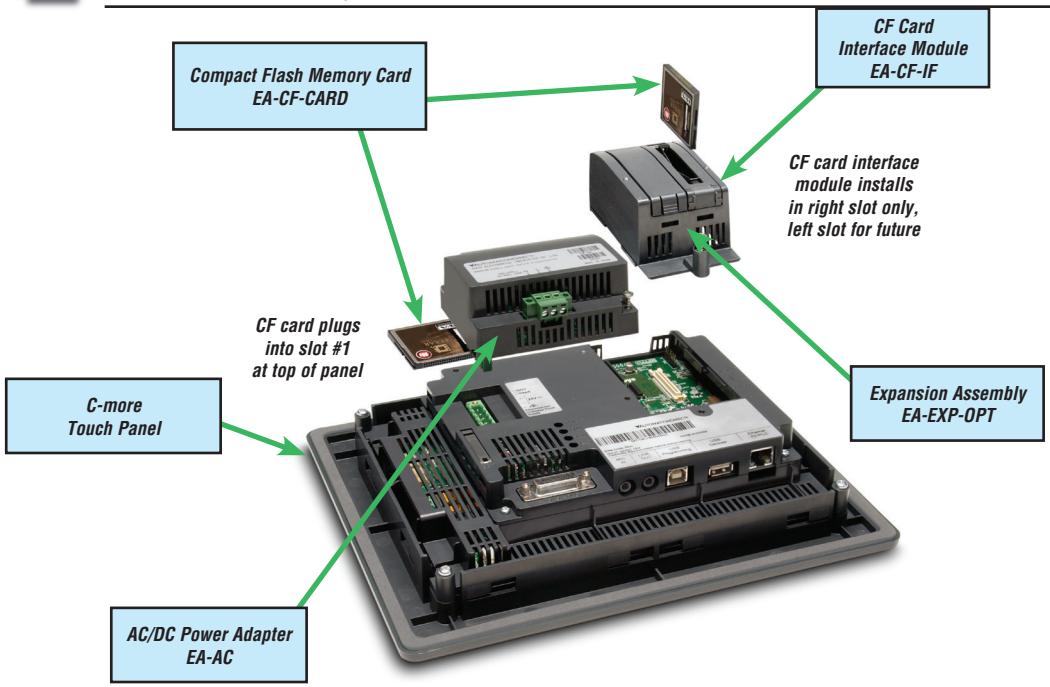

***NOTE**: The **C-more** 6" touch panels will fit into the existing cutout of any **EZTouch** 6" slim bezel panel. Use the **C-more** 6" Adapter Plate, p/n EA-6-ADPTR, to install **C-more** 6" panels into existing cutouts of **EZTouch** 6" non-slim (rounded bezel) panels.*

Optional Accessories

6" Adapter Plate
EA-6-ADPTR

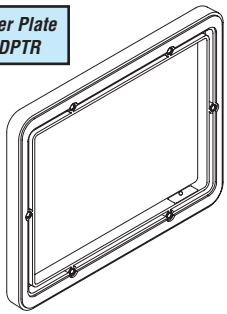

15-pin Terminal
Block Adapter
EA-COMCON-3

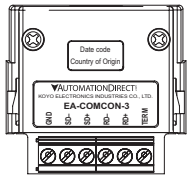

15-pin 90 Degree
Comm. Port Adapter
EA-ADPTR-4

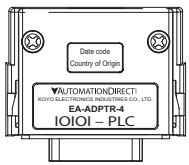

Step 4 – Become Familiar with Available Communication Ports

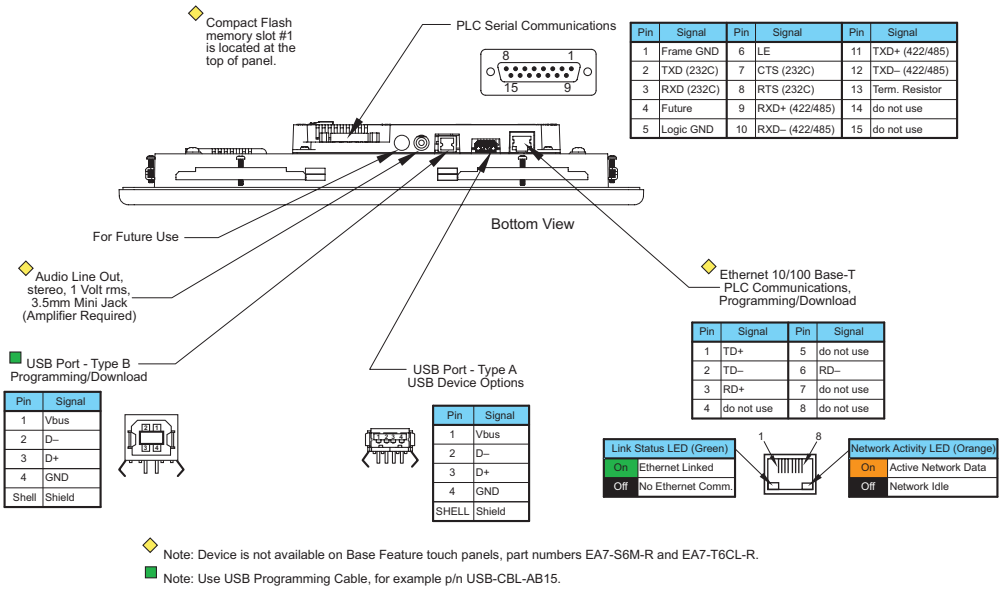

Pin	Signal	Pin	Signal	Pin	Signal
1	Frame GND	6	LE	11	TXD+ (422/485)
2	TXD (232C)	7	CTS (232C)	12	TXD– (422/485)
3	RXD (232C)	8	RTS (232C)	13	Term. Resistor
4	Future	9	RXD+ (422/485)	14	do not use
5	Logic GND	10	RXD– (422/485)	15	do not use

Pin	Signal
1	Vbus
2	D–
3	D+
4	GND
Shell	Shield

Pin	Signal
1	Vbus
2	D–
3	D+
4	GND
SHELL	Shield

Pin	Signal	Pin	Signal
1	TD+	5	do not use
2	TD–	6	RD–
3	RD+	7	do not use
4	do not use	8	do not use

◇ Note: Device is not available on Base Feature touch panels, part numbers EA7-S6M-R and EA7-T6CL-R.

■ Note: Use USB Programming Cable, for example p/n USB-CBL-AB15.

***NOTE**: See **Chapter 2: Specifications** and **Chapter 6: PLC Communications** for additional details on the available communication ports, protocols and cables.*

Step 5 – Install the Programming Software and Develop a Project

Following are the minimum system requirements for running *C-more* Programming Software, p/n EA-PGMSW, on a PC:

- Personal Computer with a 333 MHz or higher processor (CPU) clock speed recommended; Intel® Pentium/Celeron family, or AMD® K6/Athlon/Duron family, or compatible processor recommended
- Keyboard and Mouse or compatible pointing device
- Super VGA color video adapter and monitor with at least 800 x 600 pixels resolution (1024 x 768 pixels recommended)
  64K color minimum
- 300 MB free hard-disk space
- 128 MB free RAM (512 MB recommended); 512 MB free RAM (1 GB recommended) for Vista
- CD-ROM or DVD drive for installing software from the CD
- USB port or Ethernet 10/100 Mbps port for project transfer from software to touch panel (Ethernet port not available on -R models)
- Operating System - Windows® XP Home / Professional Edition Service Pack 2 (32 bit) , Windows 2000 with Service Pack 4, Windows Vista® (32 or 64 bit) or Windows 7 (32 or 64 bit), Windows 8

Insert the supplied CD-ROM into the PC's CD-ROM drive and follow the instructions. If you need assistance during the software installation, please refer to the supplied Software Installation Guide or call the AutomationDirect Technical Support team @ 770-844-4200.

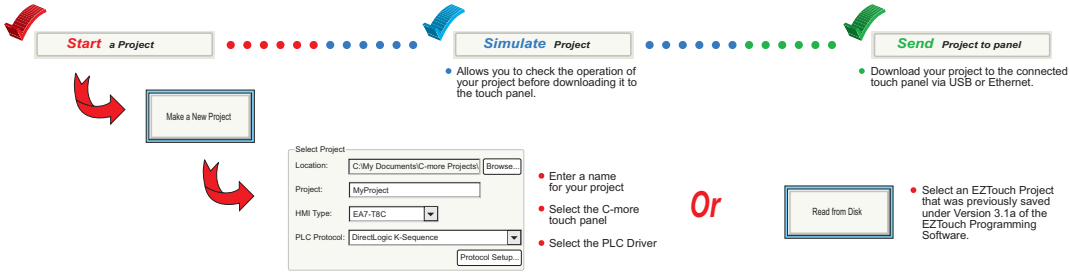

1

Step 6 – Connect Touch Panel to Computer

- **Connect** a USB Programming Cable, such as p/n USB-CBL-AB15, from an USB type A port on the PC to the USB type B programming port on the ***C-more*** touch panel
- **or** connect the ***C-more*** touch panel and PC together via an Ethernet hub or switch, and CAT5 Ethernet cables (full feature panels only)
- **or** use an Ethernet crossover cable directly between the ***C-more*** touch panel Ethernet port and the PC Ethernet port (full feature panels only)

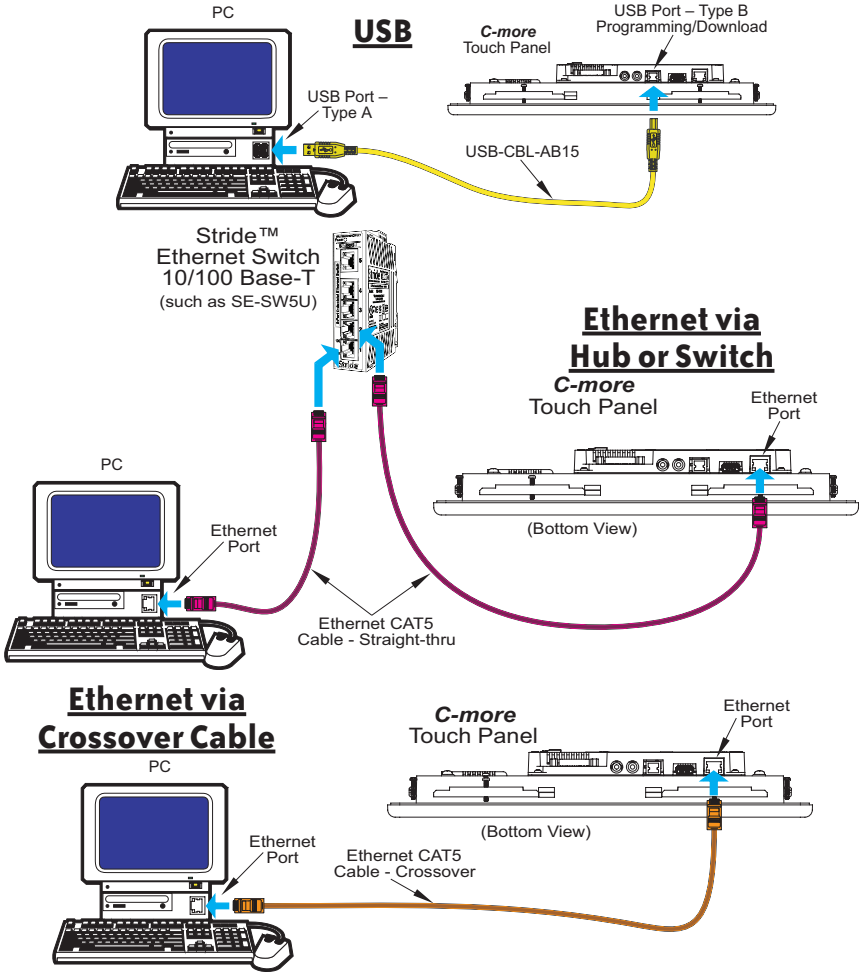

***NOTE**: On power up, the touch panel will either copy the project from its internal Flash memory to its internal SDRAM memory and run the project, or if a CompactFlash memory card is plugged into the CF1 slot, then any project contained on the CF memory card will be copied to the panel's internal SDRAM memory and be run. The memory of a CompactFlash card on CF1 will override the panel's internal Flash memory on power up or reboot, even if the CompactFlash memory card does not contain a project.*

Step 7 – Provide Power to the Touch Panel

- **Connect** a **dedicated** 24 VDC (20.4 - 28.8 VDC) switching power supply rated at a minimum of 1.5 A to the DC connector on the rear of the ***C-more*** touch panel, include wiring the ground terminal to a proper equipment ground
- **or** install a ***C-more*** AC/DC Power Adapter, EA-AC, to the rear of the touch panel and connect an AC voltage source of 100-240 VAC, 50/60Hertz, to its AC connector (see note below)
- **then** turn on the power source and check the LED status indicators on the rear of the ***C-more*** touch panel for proper indication

NOTE: *The AC/DC Power Adapter, EA-AC, is for* ***C-more*** *touch panels only. The adapter is powered from a 100-240 VAC, 50/60 Hertz power source. The adapter provides 24 VDC @ 1.5 A. Power Fault features help protect data being logged to CompactFlash during power failures. The* ***C-more*** *panel must have firmware version 1.21 Build 6.18E or higher for proper operation.*

DC Wiring

Recommended DC Supply Fuse		
Panel Size	Rating	ADC p/n
6“ – 10”	2.5 A	MDL2-5
12“ & 15”	4.0 A	MDL4

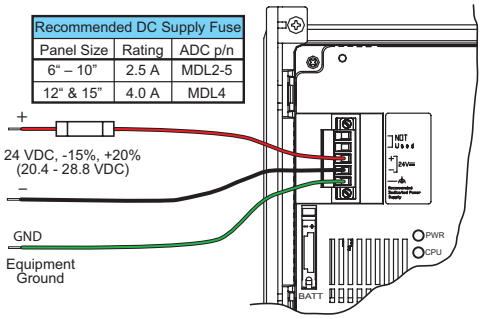

Tightening Torque	
Power supply cable torque	71 - 85 oz-in (0.5 - 0.6 Nm)
Power connector mounting torque	71 - 85 oz-in (0.5 - 0.6 Nm)
Mounting flange screw torque	57 - 71 oz-in (0.4 - 0.5 Nm)

NOTE: *Use 60 / 75 °C copper conductors only.*

WARNING: The AC/DC Power Adapter is not recommended for use with the EA7-T15C touch panel when operating temperatures are expected to exceed 40 °C [104 °F].

AC Wiring

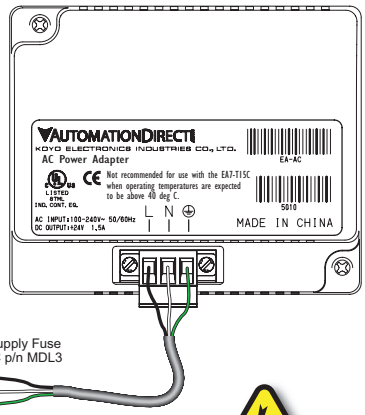

Recommended AC Supply Fuse
3.0 A time delay, ADC p/n MDL3

100 - 240 VAC
50/60 Hz

C-more LED Status Indicators

CPU Status LED (Green, Orange & Red)	
Off	Power Off
Green	Normal – CPU Run State
Red	Memory Error
Blinking Red	Operating System not found
Blinking Orange	LCD Backlight Failure
Blinking Green	Power Loss Detection

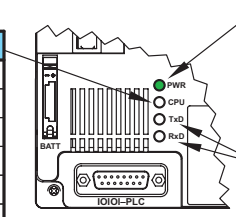

Rear View

Power LED (Green)	
On	Power On
Off	Power Off

Serial TxD/RxD LED (Green)	
On	Comm. is active
Off	No communication

1

Step 8 – Access the Touch Panel Setup Screens

- Access the Main Menu of the touch panel System Setup Screens by pressing the extreme upper left corner of the panel display area for three (3) seconds as shown below.
- Adjust the time and date for the panel by pressing the Setting button on the Main Menu, then press the Adjust Clock button on the Setting screen.
- Use the right pointing arrows for the time or date display to select the unit to change. Use the up and down arrows to increment or decrement the value for the selected unit.
- Press OK when done to accept the changes to the time and date that is retained in the touch panel's battery backed memory, or press Cancel to exit the Adjust Clock setup screen without making any changes.
- Press the Main Menu button on the Setting screen and then the Exit button on the Main Menu screen to return to the application screen.

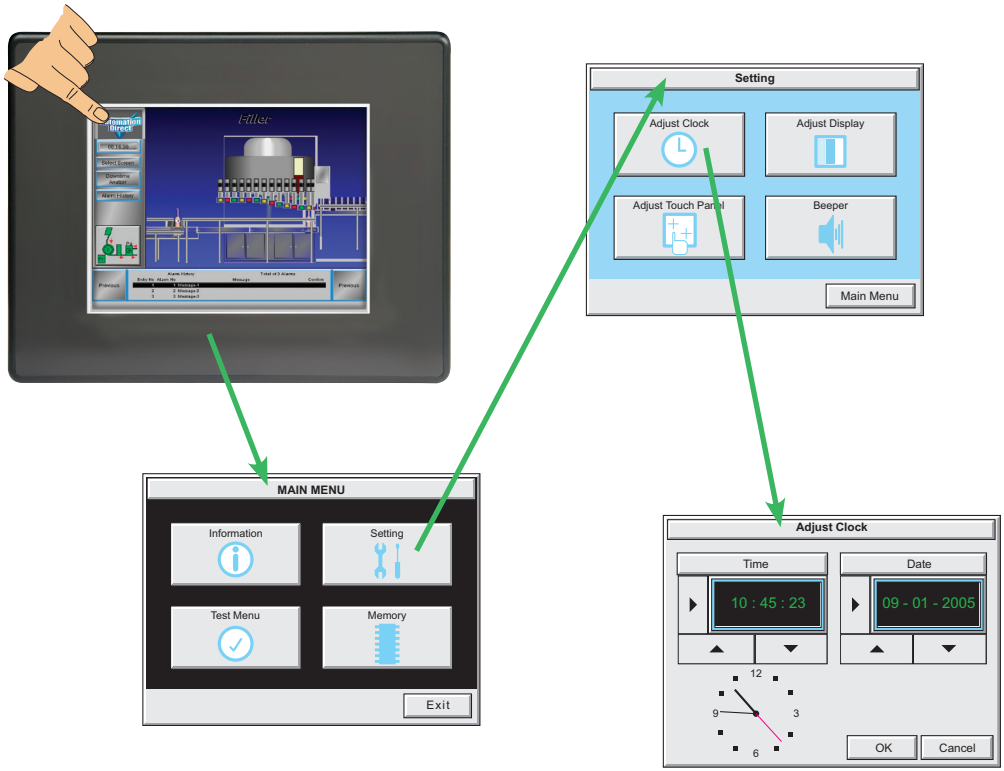

***NOTE**: When using an Ethernet connection, by default the panel is set for DHCP IP addressing. If it can not find a DHCP server, the panel will automatically assign an IP address. The IP address can be changed by the user from the programming software or by accessing the IP address setting screen as shown on page 5-19 and detailed on page 5-24. See **Chapter 5 - System Setup Screens** for details on other setup screen settings and functions.*

Step 9 – Choose Touch Panel to Device Protocol & Cables

Compatibility Table			
Model			**Protocols**
AutomationDirect	Productivity3000		P3000 Serial
			P3000 Ethernet
	CLICK		Modbus (CLICK)
	DL05/DL06	all	K-Sequence
			DirectNET
			Modbus (Koyo addressing)
		H0-ECOM/H0-ECOM100	***Direct***LOGIC Ethernet
	DL105	all	K-Sequence
	DL205	D2-230	K-Sequence
		D2-240	K-Sequence
			DirectNET
		D2-250/D2-250-1/D2-260	K-Sequence
			DirectNET
			Modbus (Koyo addressing)
		D2-240/D2-250-1/D2-260 Using DCM	***Direct***NET
			Modbus (Koyo addressing)
		H2-ECOM/H2-ECOM100	***Direct***LOGIC Ethernet
	DL305	D3-330/330P (Requires the use of a Data Communications Unit)	***Direct***NET
		D3-340	***Direct***NET
		D3-350	K-Sequence
			DirectNET
			Modbus (Koyo addressing)
		D3-350 DCM	***Direct***NET
			Modbus (Koyo addressing)
	DL405	D4-430	K-Sequence
			DirectNET
		D4-440	K-Sequence
			DirectNET
		D4-450	K-Sequence
			DirectNET
			Modbus (Koyo addressing)
		All with DCM	***Direct***NET
			Modbus (Koyo addressing)
		H4-ECOM/H4-ECOM100	***Direct***LOGIC Ethernet
	H2-WinPLC (Think & Do) Live V5.2 or later and Studio any version		Think & Do Modbus RTU (serial port)
	H2-WinPLC (Think & Do) Live V5.5.1 or later and Studio V7.2.1 or later		Think & Do Modbus TCP/IP (Ethernet port)
	GS Drives		GS Drives Serial
			GS Drives TCP/IP (GS-EDRV)
	SOLO Temperature Controllers		SOLO Temperature Controller

PLC Compatibility Table continued on the next page.

Step 9 – Choose Touch Panel to PLC Protocol & Cables (cont'd)

Compatibility Table (cont'd)		
Model		**Protocols**
Allen-Bradley	MicroLogix 1000, 1100, 1200, 1400, 1500, SLC 5-01/02/03	DH485/AIC/AIC+
	MicroLogix 1000, 1100, 1200, 1400 and 1500	DF1 Half Duplex; DF1 Full Duplex
	SLC 5-03/04/05	
	ControlLogix™, CompactLogix™, FlexLogix™	
	PLC-5	DF1 Full Duplex
	ControlLogix, CompactLogix, FlexLogix - Tag Based	DF1 Half Duplex; DF1 Full Duplex
	ControlLogix, CompactLogix, FlexLogix - Generic I/O Messaging	EtherNet/IP Server
	ControlLogix, CompactLogix, FlexLogix - Tag Based	EtherNet/IP Client
	MicroLogix 1100, 1400 and SLC 5/05, via native Ethernet port	
	MicroLogix 1000, 1100, 1200, 1400, 1500, SLC 5-03/04/05, all via ENI adapter	
GE	90/30, 90/70. Micro 90, VersaMax Micro	SNPX
Mitsubishi	FX Series	FX Direct
	Q02, Q02H, Q06H, Q12H, Q25H	Q CPU
	Q, QnA Serial	QnA Serial
	Q, Qna Ethernet	QnA Ethernet
Modicon	984 CPU, Quantum 113 CPU, AEG Modicon Micro Series 110 CPU: 311-xx, 411-xx, 512-xx, 612-xx	Modbus RTU
	Other devices using Modicon Modbus addressing	Modbus RTU
		TUModbus TCP/IP
Omron	C200 Adapter, C500	Host Link
	CJ1/CS1 Serial	FINS
	CJ1/CS1 Ethernet	
Siemens	S7-200 CPU, RS-485 Serial	PPI
	S7-200 CPU, S7-300 CPU, S7-1200 CPU; Ethernet	Ethernet ISO over TCP

Step 9 – Choose Cables continued on next page.

Step 9 – Choose Touch Panel to PLC Protocol & Cables (cont'd)

Purchased Cable Description	Cable Part Number
AutomationDirect Productivity Series, CLICK, ***Direct***LOGIC PLC RJ-12 port, DL05, DL06, DL105, DL205, D3-350, D4-450 & H2-WINPLC (RS-232C)	**EA-2CBL**
DirectLOGIC (VGA Style) 15-pin port DL06, D2-250 (250-1), D2-260 (RS-232C)	**EA-2CBL-1**
DirectLOGIC PLC RJ-11 port, D3-340 (RS-232C)	**EA-3CBL**
DirectLOGIC DL405 PLC 15-pin D-sub port, DL405 (RS-232C)	**EA-4CBL-1**
DirectLOGIC PLC 25-pin D-sub port, DL405, D3-350, DL305 DCU and all DCM's (RS-232C)	**EA-4CBL-2**
Allen-Bradley MicroLogix 1000, 1100, 1200, 1400, 1500 (RS-232C)	**EA-MLOGIX-CBL**
Allen-Bradley SLC 5-03/04/05, ControlLogix, CompactLogix, FlexLogix DF1 port (RS-232C)	**EA-SLC-232-CBL**
Allen-Bradley PLC-5 DF1 port (RS-232C)	**EA-PLC5-232-CBL**
Allen-Bradley MicroLogix, SLC 5-01/02/03, PLC5 DH485 port (RS-232C)	**EA-DH485-CBL**
GE 90/30, 90/70, Micro 90, VersaMax Micro 15-pin D-sub port (RS-422A)	**EA-90-30-CBL**
MITSUBISHI FX Series 25-pin port (RS-422A)	**EA-MITSU-CBL**
MITSUBISHI FX Series 8-pin mini-DIN (RS-422A)	**EA-MITSU-CBL-1**
OMRON Host Link (C200 Adapter, C500) (RS-232C)	**EA-OMRON-CBL**

NOTE 1: *The above list of pre-made communications cables may be purchased. See* ***Chapter 6: PLC Communications*** *for wiring diagrams of additonal* ***user constructed cables****. Chapter 6 also includes wiring diagrams for the pre-made cables.*

NOTE 2: *EZTouch serial PLC communication cables are compatible with* ***C-more*** *touch panels.*

Pre-made cable examples

EA-2CBL

EA-2CBL-1

1

Step 10 – Connect Touch Panel to PLC

- Connect the serial communications cable between the *C-more* touch panel and the PLC
- or connect the *C-more* touch panel and PLC together via an Ethernet hub or switch, and CAT5 Ethernet cables (full feature panels only)
- or use an Ethernet crossover cable directly between the *C-more* Ethernet port and the PLC Ethernet port (full feature panels only)

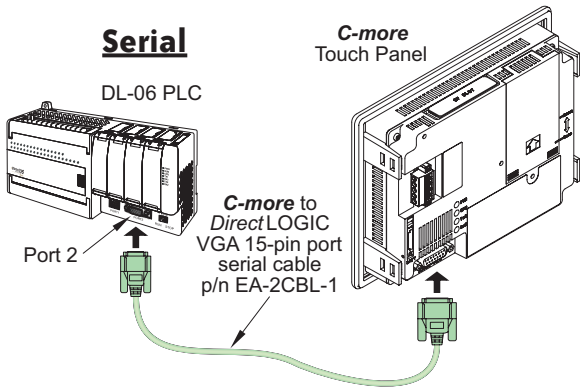

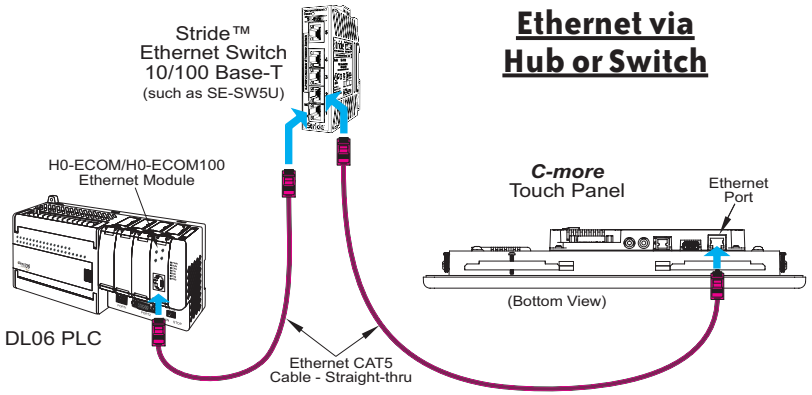

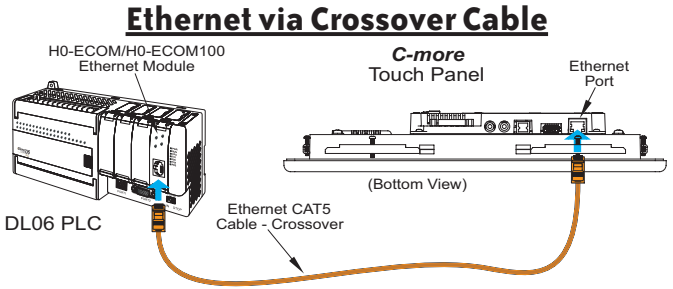

SPECIFICATIONS

In This Chapter...

Available Models **2–2**

Model Specifications **2–3**

6" Base Feature Models 2–4

6" Full Feature Models 2–5

6" Obsolete Models 2–6

8" and 10" Full Feature Models 2–8

12" and 15" Full Feature Models 2–9

EA7-S6M-R, S6C-R, T6CL-R, S6M, S6C, T6C, T6CL (Dimensions and Ports & Memory Exp.) **2–10**

EA7-T8C (Dimensions and Ports & Memory Exp.) **2–12**

EA7-T10C (Dimensions and Ports & Memory Exp.) **2–14**

EA7-T12C (Dimensions and Ports & Memory Exp.) **2–16**

EA7-T15C (Dimensions and Ports & Memory Exp.) **2–18**

Mounting Clearances **2–20**

Communications Ports **2–21**

Audio WAV File Specifications **2–23**

Memory Organization **2–24**

Handling External Memory Devices **2–25**

Power Loss Detection and Power Retention Period **2–26**

Data Logging Function and Logging Media **2–26**

Data Logging - Memory Device Full **2–26**

Chemical Compatibility **2–27**

Available Models

The *C-more*® Operator Interface is the next generation of touch panel brought to you by *AutomationDirect*. It has been designed to display and interchange graphical data from a PLC by merely viewing or touching the screen.

The *C-more* Touch Panel is available in a variety of models to suit your application. Refer to the following tables for a list of part numbers, descriptions and options available.

Part Number	Description	User Memory	CF Card Option	USB Device	Ethernet
EA7-S6M-R	6-inch ***C-more*** grayscale STN touch panel (5.7 inch viewable screen), 15 shades of gray, 320 x 240 pixel QVGA screen resolution, 333 MHz CPU, 24 VDC (20.4-28.8 VDC operating range), NEMA 4/4X, IP65 (when mounted correctly; for indoor use only), non-replaceable backlight, 50,000 hour half-life. *Base Model: Built-in USB only, no Ethernet or CompactFlash support.	10 MB	No	Yes	No
EA7-T6CL-R	6-inch ***C-more*** color TFT touch panel (5.7 inch viewable screen), 64K colors, 320 x 240 pixel QVGA screen resolution, 333 MHz CPU, 24 VDC (20.4-28.8 VDC operating range), NEMA 4/4X, IP65 (when mounted correctly; for indoor use only), non-replaceable LED backlight, 50,000 hour half-life. *Base Model: Built-in USB only, no Ethernet or CompactFlash support.	10 MB	No	Yes	No
EA7-S6M	6-inch ***C-more*** grayscale STN touch panel (5.7 inch viewable screen), 15 shades of gray, 320 x 240 pixel QVGA screen resolution, 333 MHz CPU, 24 VDC (20.4-28.8 VDC operating range), NEMA 4/4X, IP65 (when mounted correctly; for indoor use only), non-replaceable backlight, 50,000 hour half-life. Built-in Ethernet and USB; supports CompactFlash.	10MB	Yes	Yes	Yes
EA7-T6CL	6-inch ***C-more*** color TFT touch panel (5.7 inch viewable screen), 64K colors, 320 x 240 pixel QVGA screen resolution, 333 MHz CPU, 24 VDC (20.4-28.8 VDC operating range), NEMA 4/4X, IP65 (when mounted correctly; for indoor use only), non-replaceable LED backlight, 50,000 hour half-life. Built-in Ethernet and USB; supports Compact Flash.	10 MB	Yes	Yes	Yes

Table continued on the next page.

Available Models (cont'd)

Part Number	Description	User Memory	CF Card Option	USB Device	Ethernet
EA7-T8C	8-inch ***C-more*** color TFT touch panel (8.4 inch viewable screen), 64k colors, 640 x 480 pixel VGA screen resolution, 400 MHz CPU, 24VDC (20.4-28.8 VDC operating range), NEMA 4/4X, IP65 (when mounted correctly; for indoor use only), 50,000 hour half-life. Built-in Ethernet and USB; supports Compact Flash.	10 MB	Yes	Yes	Yes
EA7-T10C	10-inch ***C-more*** color TFT touch panel (10.4 inch viewable screen), 64k colors, 640 x 480 pixel VGA screen resolution, 400 MHz CPU, 24VDC (20.4-28.8 VDC operating range), NEMA 4/4X, IP65 (when mounted correctly; for indoor use only), 50,000 hour half-life. Built-in Ethernet and USB; supports Compact Flash.	10 MB	Yes	Yes	Yes
EA7-T12C	12-inch ***C-more*** color TFT touch panel (12.1 inch viewable screen), 64K colors, 800 x 600 pixel SVGA screen resolution, 400 MHz CPU, 24 VDC (20.4-28.8 VDC operating range), NEMA 4/4X, IP65 (when mounted correctly; for indoor use only), 50,000 hour half-life. Built-in Ethernet and USB; supports CompactFlash.	40 MB	Yes	Yes	Yes
EA7-T15C	15-inch ***C-more*** color TFT touch panel (15.0 inch viewable screen), 64K colors, 1024 x 768 XGA screen resolution, 400 MHz CPU, 24V DC (20.4-28.8 VDC operating range), NEMA 4/4X, IP65 (when mounted correctly; for indoor use only), 50,000 hour half- life. Built-in Ethernet and USB; supports CompactFlash.	40 MB	Yes	Yes	Yes

Model Specifications

The following tables on the next four pages provide details to the Specifications of all *C-more* models. The specification tables are separated into the following groups:

- 6" Base Feature Models, EA7-S6M-R and EA7-T6CL-R; obsolete model EA7-S6C-R
- 6" Full Feature Models, EA7-S6M, and EA7-T6CL; obsolete models EA7-S6C and EA7-T6C
- 8" & 10" Full Feature Models, EA7-T8C and EA7-T10C
- 12" & 15" Full Feature Models, EA7-T12C & EA7-T15C

The following note applies to the Backlight Average Lifetime of 50,000 hours shown in the following tables:

***Note**: The backlight average lifetime is defined as the average usage time it takes before the brightness becomes 50% of the initial brightness. The lifetime of the backlight depends on the ambient temperature. The lifetime will decrease under low or high temperature usage.*

The following note applies to the Touch Panel Type specification shown in the following tables:

***Note**: The Touchscreen is designed to respond to a single touch. If it is touched at multiple points at the same time, an unexpected object may be activated.*

6" Base Feature Models

Specification \ Model	6" STN grayscale w/ base features	6" TFT color w/ base features
Part Number	**EA7-S6M-R**	**EA7-T6CL-R**
Display Actual Size and Type	5.7" STN grayscale	5.7" TFT color
Color Scale	15 shades of gray	65,536 colors
Display Viewing Area	4.54" x 3.4" [115.2 mm x 86.4 mm]	
Screen Pixels	320 x 240 (QVGA)	
Display Brightness	150 cd/m² (NITS)	270 cd/m² (NITS)
LCD Panel Dot Pitch	0.36 mm x 0.36 mm	
Backlight Average Lifetime	Approximately 50,000 hours (See note at bottom of page 2-3.)	
Backlight User Replaceable	No	
Touch Panel Type	Analog resistive (10-bit resolution, 1024 x 1024 touch area) (See note at bottom of page 2-3.)	
CPU Type	32-Bit RISC CPU (333 MHz)	
Battery	Replaceable battery – ADC Part # D2-BAT-1 (Manufacturer Part # CR2354)	
System Memory	SDRAM 32 MBytes	
System Flash Memory	FLASH 32 MBytes	
Backup Memory (SRAM)	Control data backup memory (SRAM) 256 KBytes	
Logging Data Memory	USB Pen Drive	
Number of Screens	Up to 9999 with ver. 2.40 and later – limited by project memory (10 MBytes)	
Realtime Clock	Built into panel (PLC clock is still accessible if available)	
Calendar – Month/Day/Year	Yes - battery backup	
Screen Saver	Yes, backlight turns off after a 30–1500 minute adjustable time, or can be disabled	
Serial PLC Interface	Serial PLC Port: RS-232C/422/485 15-Pin D-sub (female)	
USB Port – Type B	Download/Program – USB Port – type B	
USB Port – Type A	Port for USB device options – type A	
Ethernet Port	not available	
Audio Line Out	not available	
CF Card – Slot #1	not available	
Expansion Assembly (p/n EA-EXP-OPT)	not available	
Supply Power	24 VDC, -15%, +20% (20.4–28.8 VDC operating range, minimum of 1.5 A) (Use the AC/DC Power Adapter, EA-AC, to power the touch panel from a 100-240 VAC, 50/60 Hz. power source.)	
Power Consumption	9 W @ 24 VDC	
Recommended DC Supply Fuse	2.5 A time delay, ADC p/n MDL2-5	
Operating Temperature	0 to 50 °C (32 to 122 °F); Maximum surrounding air temperature rating: 50 °C (122 °F)	
Storage Temperature	–20 to +60 °C (–4 to +140 °F)	
Humidity	10–85% RH (non-condensing)	
Noise Immunity	Noise voltage: 1000 Vp-p, Pulse width: 1 µs, Rise time: 1 ns	
Withstand Voltage	1000 VDC for 1 minute, between DC power supply input terminal and safety ground	
Insulation Resistance	Over 20 MΩ between DC power supply input terminal and safety ground	
Vibration	IEC61131-2 compliant, 10–57 Hz: 0.075 mm amplitude, 57–150 Hz 1.0 G: 10 sweep cycles per axis on each of 3 mutually perpendicular axes	
Shock	15 G peak, 11 ms duration, 2 shocks per axis, on 3 mutually perpendicular axes	
Environment	For use in Pollution Degree 2 environment	
Enclosure	Meets UL Type 4X, when mounted correctly. For indoor use only.	
Agency Approvals	UL, cUL, CSA, CE	
Dimensions	6.140" x 8.047" x 1.697" [156.0 mm x 204.4 mm x 43.1 mm]	
Weight	1.46 lb. [660 g]	1.43 lb. [650 g]

6” Full Feature Models

Specification \ Model	6” STN grayscale w/ full features	6” TFT color w/ full features
Part Number	**EA7-S6M**	**EA7-T6CL**
Display Actual Size and Type	5.7” STN grayscale	5.7” TFT color
Color Scale	15 shades of gray	65,536 colors
Display Viewing Area	4.54” x 3.4” [115.2 mm x 86.4 mm]	
Screen Pixels	320 x 240 (QVGA)	
Display Brightness	150 cd/m² (NITS)	270 cd/m² (NITS)
LCD Panel Dot Pitch	0.36 mm x 0.36 mm	
Backlight Average Lifetime	Approximately 50,000 hours (See note at bottom of page 2-3.)	
Backlight User Replaceable	No	
Touch Panel Type	Analog resistive (10-bit resolution, 1024 x 1024 touch area) (See note at bottom of page 2-3.)	
CPU Type	32-Bit RISC CPU (333 MHz)	
Battery	Replaceable battery – ADC Part # D2-BAT-1 (Manufacturer Part # CR2354)	
System Memory	SDRAM 32 MBytes	
System Flash Memory	FLASH 32 MBytes	
Backup Memory (SRAM)	Control data backup memory (SRAM) 256 KBytes	
Logging Data Memory	CompactFlash Memory Card p/n EA-CF-CARD, industrial grade, high speed (Optional) or USB Pen Drive	
Number of Screens	Up to 9999 with ver. 2.40 and later – limited by project memory (10 MBytes)	
Realtime Clock	Built into panel (PLC clock is still accessible if available)	
Calendar – Month/Day/Year	Yes - battery backup	
Screen Saver	Yes, backlight turns off after a 30–1500 minute adjustable time, or can be disabled	
Serial PLC Interface	Serial PLC Port: RS-232C/422/485 15-Pin D-sub (female)	
USB Port – Type B	Download/Program – USB Port – type B	
USB Port – Type A	Port for USB device options – type A	
Ethernet Port	Ethernet 10/100 Base-T	
Audio Line Out	Audio Line Out, 1 volt rms, stereo – requires amplifier and speaker(s)	
CF Card – Slot #1	Optional: CompactFlash Card p/n EA-CF-CARD, slot #1 located on top side of touch panel.	
Expansion Assembly (p/n EA-EXP-OPT)	Optional: Use the CF Card Adapter p/n EA-CF-IF in the right slot of the expansion assembly for installing CF card - Slot #2. The left slot of the expansion assembly is for future options.	
Supply Power	24 VDC, -15%, +20% (20.4–28.8 VDC operating range, minimum of 1.5 A) (Use the AC/DC Power Adapter, EA-AC, to power the touch panel from a 100-240 VAC, 50/60 Hz. power source.)	
Power Consumption	10 W @ 24 VDC	11 W @ 24 VDC
Recommended DC Supply Fuse	2.5 A time delay, ADC p/n MDL2-5	
Operating Temperature	0 to 50 °C (32 to 122 °F); Maximum surrounding air temperature rating: 50 °C (122 °F)	
Storage Temperature	–20 to +60 °C (–4 to +140 °F)	
Humidity	10–85% RH (non-condensing)	
Noise Immunity	Noise voltage: 1000 Vp-p, Pulse width: 1 µs, Rise time: 1 ns	
Withstand Voltage	1000 VDC for 1 minute, between DC power supply input terminal and safety ground	
Insulation Resistance	Over 20 MΩ between DC power supply input terminal and safety ground	
Vibration	IEC61131-2 compliant, 10–57 Hz: 0.075 mm amplitude, 57–150 Hz 1.0 G: 10 sweep cycles per axis on each of 3 mutually perpendicular axes	
Shock	15 G peak, 11 ms duration, 2 shocks per axis, on 3 mutually perpendicular axes	
Environment	For use in Pollution Degree 2 environment	
Enclosure	Meets UL Type 4X when mounted correctly. For indoor use only.	
Agency Approvals	UL, cUL, CSA, CE	
Dimensions	6.140” x 8.047” x 1.697” [156.0 mm x 204.4 mm x 43.1 mm]	
Weight	1.50 lb. [680 g]	1.48 lb. [670 g]

6" Obsolete Models

Specification \ Model	6" STN color w/ base features
Part Number	EA7-S6C-R
Display Actual Size and Type	5.7" STN color
Color Scale	256 colors
Display Viewing Area	4.54" x 3.4" [115.2 mm x 86.4 mm]
Screen Pixels	320 x 240 (QVGA)
Display Brightness	200 cd/m² (NITS)
LCD Panel Dot Pitch	0.36 mm x 0.36 mm
Backlight Average Lifetime	Approximately 50,000 hours (See note at bottom of page 2-3.)
Backlight User Replaceable	No
Touch Panel Type	Analog resistive (10-bit resolution, 1024 x 1024 touch area) (See note at bottom of page 2-3.)
CPU Type	32-Bit RISC CPU (333 MHz)
Battery	Replaceable battery – ADC Part # D2-BAT-1 (Manufacturer Part # CR2354)
System Memory	SDRAM 32 MBytes
System Flash Memory	FLASH 32 MBytes
Backup Memory (SRAM)	Control data backup memory (SRAM) 256 KBytes
Logging Data Memory	USB Pen Drive
Number of Screens	Up to 9999 with ver. 2.40 and later – limited by project memory (10Mbytes)
Realtime Clock	Built into panel (PLC clock is still accessible if available)
Calendar – Month/Day/Year	Yes - battery backup
Screen Saver	Yes, backlight turns off after a 30–1500 minute adjustable time, or can be disabled
Serial PLC Interface	Serial PLC Port: RS-232C/422/485 15-Pin D-sub (female)
USB Port – Type B	Download/Program – USB Port – type B
USB Port – Type A	Port for USB device options – type A
Ethernet Port	not available
Audio Line Out	not available
CF Card – Slot #1	not available
Expansion Assembly (p/n EA-EXP-OPT)	not available
Supply Power	24 VDC, -15%, +20% (20.4–28.8 VDC operating range, minimum of 1.5 A) (Use the AC/DC Power Adapter, EA-AC, to power the touch panel from a 100-240 VAC, 50/60 Hz. power source.)
Power Consumption	10 W @ 24 VDC
Recommended DC Supply Fuse	2.5 A time delay, ADC p/n MDL2-5
Operating Temperature	0 to 50 °C (32 to 122 °F); Maximum surrounding air temperature rating: 50 °C (122 °F)
Storage Temperature	–20 to +60 °C (–4 to +140 °F)
Humidity	10–85% RH (non-condensing)
Noise Immunity	Noise voltage: 1000 Vp-p, Pulse width: 1 µs, Rise time: 1 ns
Withstand Voltage	1000 VDC for 1 minute, between DC power supply input terminal and safety ground
Insulation Resistance	Over 20 MΩ between DC power supply input terminal and safety ground
Vibration	IEC61131-2 compliant, 10–57 Hz: 0.075 mm amplitude, 57–150 Hz 1.0 G: 10 sweep cycles per axis on each of 3 mutually perpendicular axes
Shock	15 G peak, 11 ms duration, 2 shocks per axis, on 3 mutually perpendicular axes
Environment	For use in Pollution Degree 2 environment
Enclosure	Meets UL Type 4X, when mounted correctly. For indoor use only.
Agency Approvals	UL, cUL, CE
Dimensions	6.140" x 8.047" x 1.697" [156.0 mm x 204.4 mm x 43.1 mm]
Weight	1.39 lb. [630 g]

6" Obsolete Models (cont'd)

Specification \ Model	6" STN color w/ full features	6" TFT color w/ full features
Part Number	**EA7-S6C**	**EA7-T6C**
Display Actual Size and Type	5.7" STN color	5.7" TFT color
Color Scale	256 colors	65,536 colors
Display Viewing Area	4.54" x 3.4" [115.2 mm x 86.4 mm]	
Screen Pixels	320 x 240 (QVGA)	
Display Brightness	200 cd/m² (NITS)	270 cd/m² (NITS)
LCD Panel Dot Pitch	0.36 mm x 0.36 mm	
Backlight Average Lifetime	Approximately 50,000 hours (See note at bottom of page 2-3.)	
Backlight User Replaceable	No	
Touch Panel Type	Analog resistive (10-bit resolution, 1024 x 1024 touch area) (See note at bottom of page 2-3.)	
CPU Type	32-Bit RISC CPU (333 MHz)	
Battery	Replaceable battery – ADC Part # D2-BAT-1 (Manufacturer Part # CR2354)	
System Memory	SDRAM 32 MBytes	
System Flash Memory	FLASH 32 MBytes	
Backup Memory (SRAM)	Control data backup memory (SRAM) 256 KBytes	
Logging Data Memory	CompactFlash Memory Card p/n EA-CF-CARD, industrial grade, high speed (Optional) or USB Pen Drive	
Number of Screens	Up to 9999 with ver. 2.40 and later – limited by project memory (10Mbytes)	
Realtime Clock	Built into panel (PLC clock is still accessible if available)	
Calendar – Month/Day/Year	Yes - battery backup	
Screen Saver	Yes, backlight turns off after a 30–1500 minute adjustable time, or can be disabled	
Serial PLC Interface	Serial PLC Port: RS-232C/422/485 15-Pin D-sub (female)	
USB Port – Type B	Download/Program – USB Port – type B	
USB Port – Type A	Port for USB device options – type A	
Ethernet Port	Ethernet 10/100 Base-T	
Audio Line Out	Audio Line Out, 1 volt rms, stereo – requires amplifier and speaker(s)	
CF Card – Slot #1	Optional: CompactFlash Card p/n EA-CF-CARD, slot #1 located on top side of touch panel.	
Expansion Assembly (p/n EA-EXP-OPT)	Adapter p/n EA-CF-IF in the right slot of the expansion assembly for installing CF card - Slot #2. The left slot of the expansion assembly is for future options.	
Supply Power	24 VDC, -15%, +20% (20.4–28.8 VDC operating range, minimum of 1.5 A) (Use the AC/DC Power Adapter, EA-AC, to power the touch panel from a 100-240 VAC, 50/60 Hz. power source.)	
Power Consumption	11 W @ 24 VDC	13 W @ 24 VDC
Recommended DC Supply Fuse	2.5 A time delay, ADC p/n MDL2-5	
Operating Temperature	0 to 50 °C (32 to 122 °F); Maximum surrounding air temperature rating: 50 °C (122 °F)	
Storage Temperature	–20 to +60 °C (–4 to +140 °F)	
Humidity	10–85% RH (non-condensing)	
Noise Immunity	Noise voltage: 1000 Vp-p, Pulse width: 1 µs, Rise time: 1 ns	
Withstand Voltage	1000 VDC for 1 minute, between DC power supply input terminal and safety ground	
Insulation Resistance	Over 20 MΩ between DC power supply input terminal and safety ground	
Vibration	IEC61131-2 compliant, 10–57 Hz: 0.075 mm amplitude, 57–150 Hz 1.0 G: 10 sweep cycles per axis on each of 3 mutually perpendicular axes	
Shock	15 G peak, 11 ms duration, 2 shocks per axis, on 3 mutually perpendicular axes	
Environment	For use in Pollution Degree 2 environment	
Enclosure	Meets UL Type 4X when mounted correctly. For indoor use only.	
Agency Approvals	UL, cUL, CE	
Dimensions	6.140" x 8.047" x 1.697" [156.0 mm x 204.4 mm x 43.1 mm]	
Weight	1.43 lb. [650 g]	1.52 lb. [690 g]

8" and 10" Full Feature Models

Specifications \ Model	8" TFT color w/ full features	10" TFT color w/ full features
Part Number	**EA7-T8C**	**EA7-T10C**
Display Actual Size and Type	8.4" TFT color	10.4" TFT color
Color Scale	65,536 colors	
Display Viewing Area	6.73" x 5.05" [170.9 mm x 128.2 mm]	8.31" x 6.24" [211.2 mm x 158.4 mm]
Screen Pixels	640 x 480 (VGA)	
Display Brightness	300 cd/m² (NITS)	270 cd/m² (NITS)
LCD Panel Dot Pitch	0.267 mm x 0.267 mm	0.33 mm x 0.33 mm
Backlight Average Lifetime	Approximately 50,000 hours (See note at bottom of page 2-3.)	
Backlight User Replaceable	Yes – Correct replacement bulb is dependent on the panel serial no, see Chapter 9 for complete details.	
Touch Panel Type	Analog resistive (10-bit resolution, 1024 x 1024 touch area) (See note at bottom of page 2-3.)	
CPU Type	32-Bit RISC CPU (400 MHz)	
Battery	Replaceable battery – ADC Part # D2-BAT-1 (Manufacturer Part # CR2354)	
System Memory	SDRAM 32 MBytes	
System Flash Memory	FLASH 32 MBytes	
Backup Memory (SRAM)	Control data backup memory (SRAM) 256 KBytes	
Logging Data Memory	CompactFlash Memory Card p/n EA-CF-CARD, industrial grade, high speed (Optional) or USB Pen Drive	
Number of Screens	Up to 9999 with ver. 2.40 and later – limited by project memory (10 MBytes)	
Realtime Clock	Built into panel (PLC clock is still accessible if available)	
Calendar – Month/Day/Year	Yes - battery backup	
Screen Saver	Yes, backlight turns off after a 30–1500 minute adjustable time, or can be disabled	
Serial PLC Interface	Serial PLC Port: RS-232C/422/485 15-Pin D-sub (female)	
USB Port – Type B	Download/Program – USB Port – type B	
USB Port – Type A	Port for USB 1.1 device options – type A	
Ethernet Port	Ethernet 10/100 Base-T	
Audio Line Out	Audio Line Out, 1 volt rms, stereo – requires amplifier and speaker(s)	
CF Card – Slot #1	Optional: CompactFlash Card p/n EA-CF-CARD, slot #1 located on top side of touch panel.	
Expansion Assembly (p/n EA-EXP-OPT)	Optional: Use the CF Card Adapter p/n EA-CF-IF in the right slot of the expansion assembly for installing CF card - Slot #2. The left slot of the expansion assembly is for future options.	
Supply Power	24 VDC, -15%, +20% (20.4–28.8 VDC operating range, minimum of 1.5 A) (Use the AC/DC Power Adapter, EA-AC, to power the touch panel from a 100-240 VAC, 50/60 Hz. power source.)	
Power Consumption	15 W @ 24 VDC	17 W @ 24 VDC
Recommended DC Supply Fuse	2.5 A time delay, ADC p/n MDL2-5	
Operating Temperature	0 to 50 °C (32 to 122 °F); Maximum surrounding air temperature rating: 50 °C (122 °F)	
Storage Temperature	–20 to +60 °C (–4 to +140 °F)	
Humidity	10–85% RH (non-condensing)	
Noise Immunity	Noise voltage: 1000 Vp-p, Pulse width: 1 µs, Rise time: 1 ns	
Withstand Voltage	1000 VDC for 1 minute, between DC power supply input terminal and safety ground	
Insulation Resistance	Over 20 MΩ between DC power supply input terminal and safety ground	
Vibration	IEC61131-2 compliant, 10–57 Hz: 0.075 mm amplitude, 57–150 Hz 1.0 G: 10 sweep cycles per axis on each of 3 mutually perpendicular axes	
Shock	15 G peak, 11 ms duration, 2 shocks per axis, on 3 mutually perpendicular axes	
Environment	For use in Pollution Degree 2 environment	
Enclosure	Meets UL Type 4X when mounted correctly. For indoor use only.	
Agency Approvals	UL, cUL, CSA, CE	
Dimensions	8.748" x 10.894" x 2.053" [222.2 mm x 276.7 mm x 52.1 mm]	10.669" x 13.661" x 2.079" [271.0 x 347.0 x 52.8 mm]
Weight	2.60 lb. [1,180 g]	3.55 lb. [1,610 g]

12" and 15" Full Feature Models

Specifications \ Model	12" TFT color w/ full features	15" TFT color w/ full features
Part Number	**EA7-T12C**	**EA7-T15C**
Display Actual Size and Type	12.1" TFT color	15.0" TFT color
Color Scale	65,536 Colors	
Display Viewing Area	9.47" x 7.62" [240.6 mm x 184.5 mm]	11.97" x 8.98" [304.1 mm x 228.1 mm]
Screen Pixels	800 x 600 (SVGA)	1024 x 768 (XGA)
Display Brightness	260 cd/m² (NITS)	220 cd/m² (NITS)
LCD Panel Dot Pitch	0.267 mm x 0.267 mm	0.297 mm x 0.297 mm
Backlight Average Lifetime	Approximately 50,000 hours (See note at bottom of page 2-3.)	
Backlight User Replaceable	Yes – Correct replacement bulb is dependent on the panel serial no, see Chapter 9 for complete details.	
Touch Panel Type	Analog resistive (12-bit resolution, 4096 x 4096 touch area) (See note at bottom of page 2-3.)	
CPU Type	32-Bit RISC CPU (400 MHz) Plus Graphic Accelerator Chip	
Battery	Replaceable battery – ADC Part # D2-BAT-1 (Manufacturer Part # CR2354)	
System Memory	SDRAM 64 MBytes	
System Flash Memory	FLASH 64 MBytes	
Backup Memory (SRAM)	Control data backup memory (SRAM) 256 KBytes	
Logging Data Memory	CompactFlash Memory Card p/n EA-CF-CARD, industrial grade, high speed (Optional) or USB Pen Drive	
Number of Screens	Up to 9999 with ver. 2.40 and later – limited by project memory (10 MBytes))	
Realtime Clock	Built into panel (PLC clock is still accessible if available)	
Calendar – Month/Day/Year	Yes - battery backup	
Screen Saver	Yes, backlight turns off after a 30–1500 minute adjustable time, or can be disabled	
Serial PLC Interface	Serial PLC Port: RS-232C/422/485 15-Pin D-sub (female)	
USB Port – Type B	Download/Program – USB Port – type B	
USB Port – Type A	Port for USB device options – type A	
Ethernet Port	Ethernet 10/100 Base-T	
Audio Line Out	Audio Line Out, 1 volt rms, stereo – requires amplifier and speaker(s)	
CF Card – Slot #1	Optional: CompactFlash Card p/n EA-CF-CARD, slot #1 located on top side of touch panel.	
Expansion Assembly (p/n EA-EXP-OPT)	Optional: Use the CF Card Adapter p/n EA-CF-IF in the right slot of the expansion assembly for installing CF card - Slot #2. The left slot of the expansion assembly is for future options.	
Supply Power	24 VDC, -15%, +20% (20.4–28.8 VDC operating range, minimum of 1.5 A) (Use the AC/DC Power Adapter, EA-AC, to power the touch panel from a 100-240 VAC, 50/60 Hz. power source.)	
Power Consumption	20 W @ 24 VDC	33 W @ 24 VDC
Recommended DC Supply Fuse	4.0 A time delay, ADC MDL4	
Operating Temperature	0 to 50 °C (32 to 122 °F); Maximum surrounding air temperature rating: 50 °C (122 °F)	
Storage Temperature	–20 to +60 °C (–4 to +140 °F)	
Humidity	10–85% RH (non-condensing)	
Noise Immunity	Noise voltage: 1000 Vp-p, Pulse width: 1 µs, Rise time: 1 ns	
Withstand Voltage	1000 VDC for 1 minute, between DC power supply input terminal and safety ground	
Insulation Resistance	Over 20 MΩ between DC power supply input terminal and safety ground	
Vibration	IEC61131-2 compliant, 10–57 Hz: 0.075 mm amplitude, 57–150 Hz 1.0 G: 10 sweep cycles per axis on each of 3 mutually perpendicular axes	
Shock	15 G peak, 11 ms duration, 2 shocks per axis, on 3 mutually perpendicular axes	
Environment	For use in Pollution Degree 2 environment	
Enclosure	Meets UL Type 4X when mounted correctly. For indoor use only.	
Agency Approvals	UL, cUL, CSA, CE	
Dimensions	11.024" x 13.336" x 2.075" [280.0 x 339.5 x 52.7 mm]	13.000" x 16.748" x 1.0481" [330.2 x 425.4 x 54.0 mm]
Weight	4.59 lb. [2,080 g]	7.01 lb. [3,180 g]

EA7-S6M-R, S6C-R, T6CL-R, S6M, S6C, T6C, T6CL

Dimensions:

All the necessary mounting hardware is provided with the touch panel. Use the two (2) mounting clips and screws to secure the touch panel to the cabinet or enclosure surface. A template is provided for marking the cutout dimensions on the mounting surface.

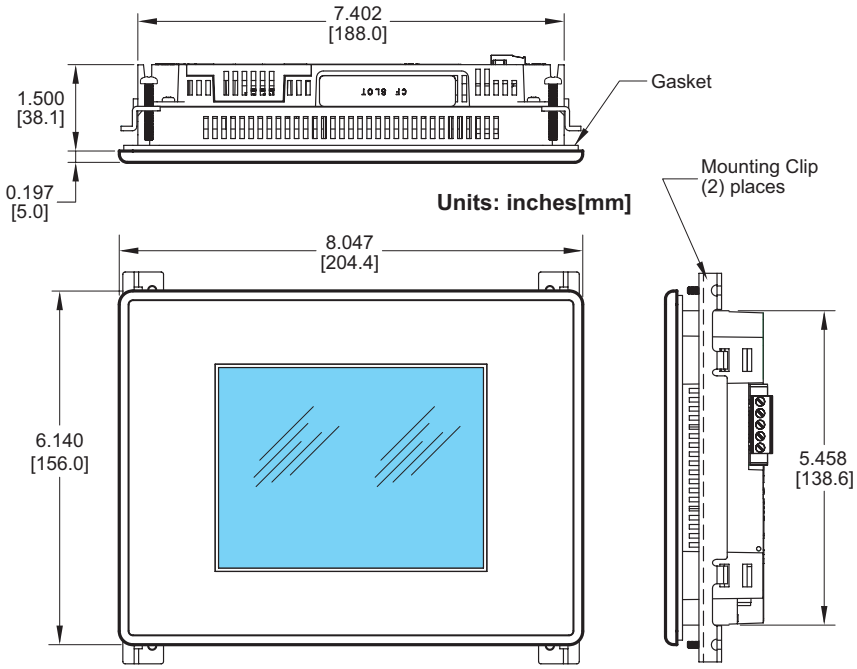

Enclosure Mounting Thickness Ranges and Mounting Clip Screw Torque

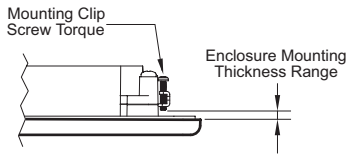

Touch Panel Size	Enclosure Thickness Range	Mounting Clip Screw Torque
6" – lower mounting clip position	0.039 - 0.24 inch [1 – 6 mm]	35 ~ 50 oz-in [0.25 ~ 0.35 Nm]
6" – upper mounting clip position	0.20 - 0.63 inch [5 – 16 mm]	35 ~ 50 oz-in [0.25 ~ 0.35 Nm]

EA7-S6M-R, S6C-R, T6CL-R, S6M, S6C, T6C, T6CL

Ports & Memory Expansion:

Base Feature Model
EA7-S6M-R and EA7-T6CL-R

Also obsolete model
EA7-S6C-R

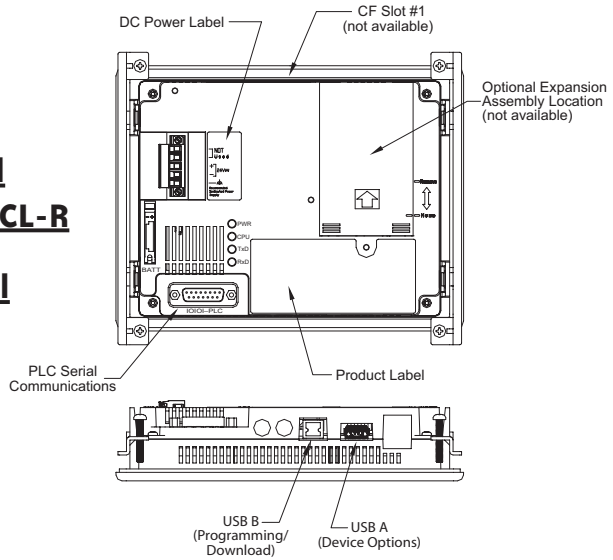

Full Feature Model
EA7-S6M and EA7-T6CL

Also obsolete models
EA7-S6C and EA7-T6C

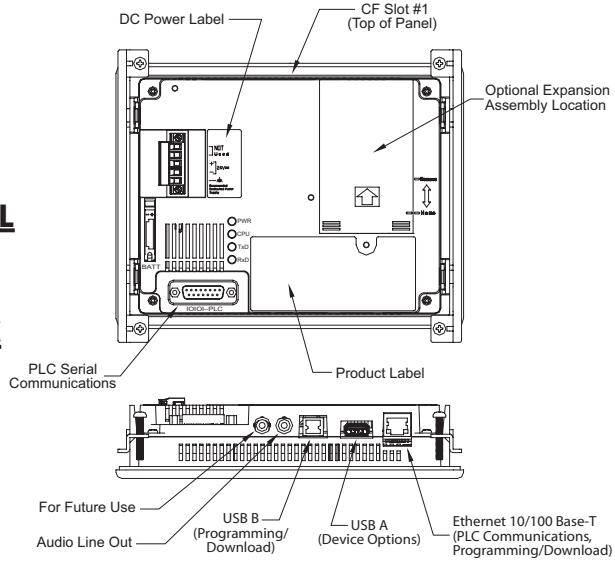

EA7-T8C

Dimensions:

All the necessary mounting hardware is provided with the touch panel. Use the six (6) mounting clips and screws to secure the touch panel to the cabinet or enclosure surface. A template is provided for marking the cutout dimensions on the mounting surface.

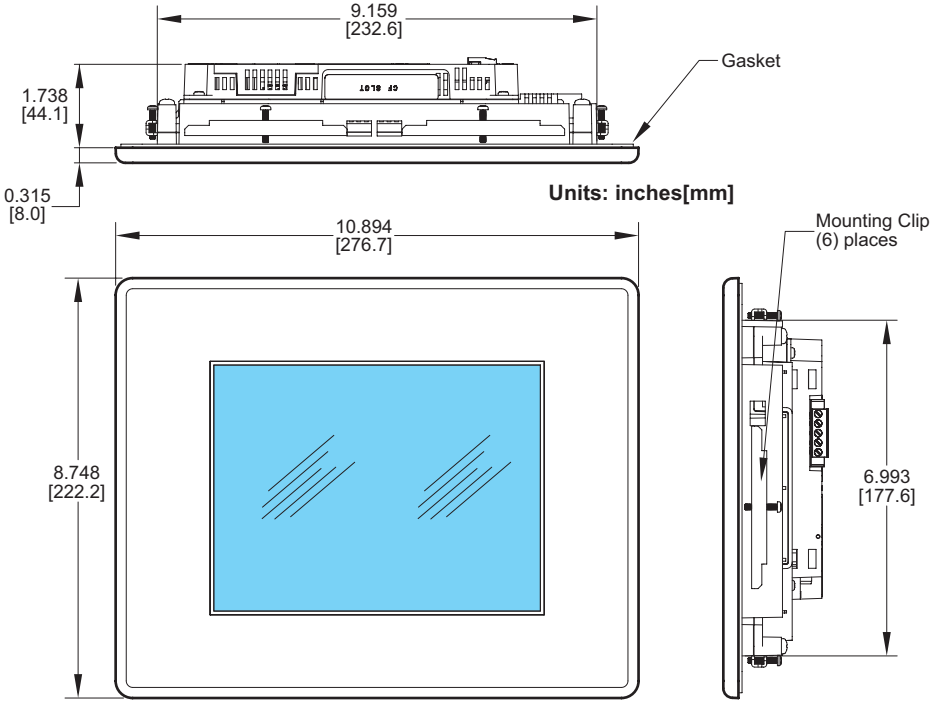

Enclosure Mounting Thickness Ranges and Mounting Clip Screw Torque

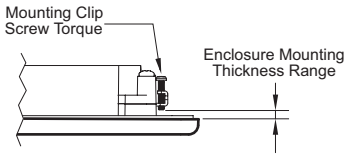

Touch Panel Size	Enclosure Thickness Range	Mounting Clip Screw Torque
8", 10", 12" & 15"	0.039 - 0.20 inch [1 – 5 mm]	42 ~ 57 oz-in [0.3 ~ 0.4 Nm]

EA7-T8C

Ports & Memory Expansion:

Full Feature Model
EA7-T8C

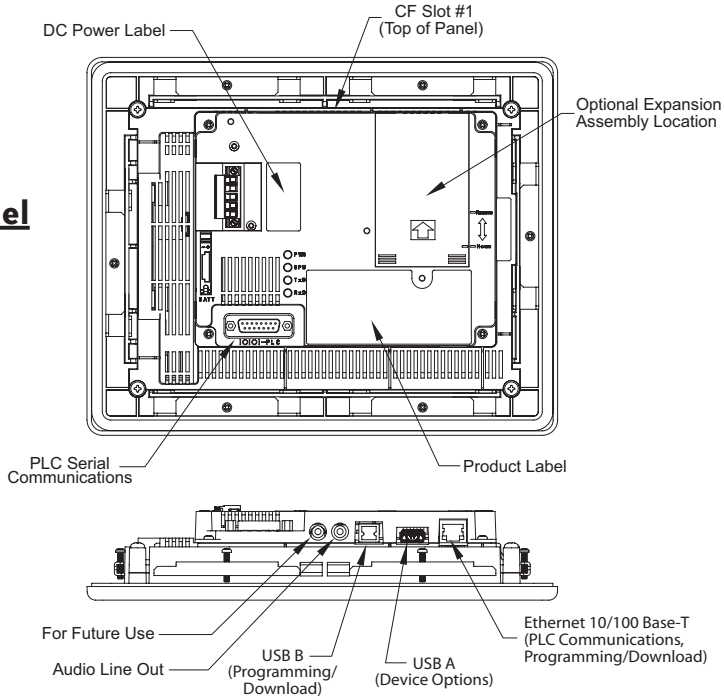

EA7-T10C

2

Dimensions:

All the necessary mounting hardware is provided with the touch panel. Use the six (6) mounting clips and screws to secure the touch panel to the cabinet or enclosure surface. A template is provided for marking the cutout dimensions on the mounting surface.

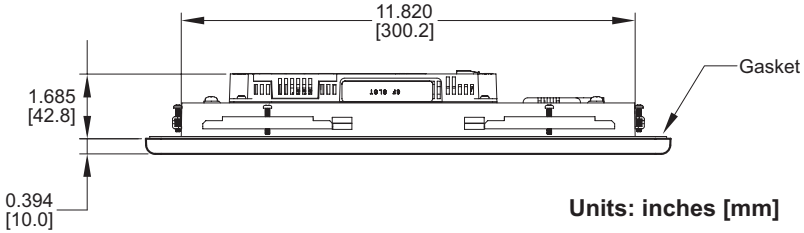

Units: inches [mm]

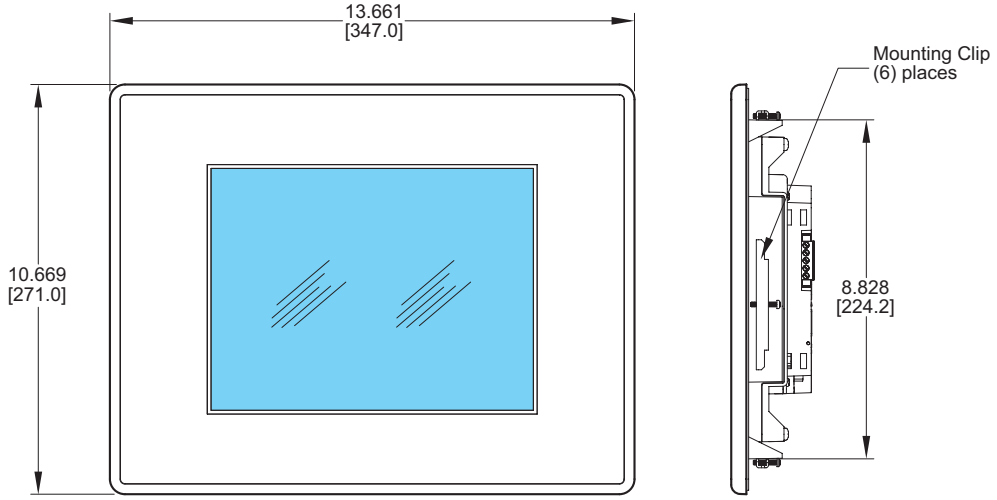

Enclosure Mounting Thickness Ranges and Mounting Clip Screw Torque

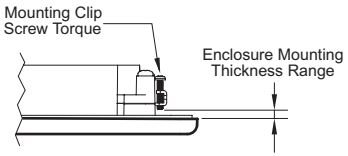

Touch Panel Size	Enclosure Thickness Range	Mounting Clip Screw Torque
8", 10", 12" & 15"	0.039 - 0.20 inch [1 – 5 mm]	42 ~ 57 oz-in [0.3 ~ 0.4 Nm]

EA7-T10C

Ports & Memory Expansion:

Full Feature Model
EA7-T10C

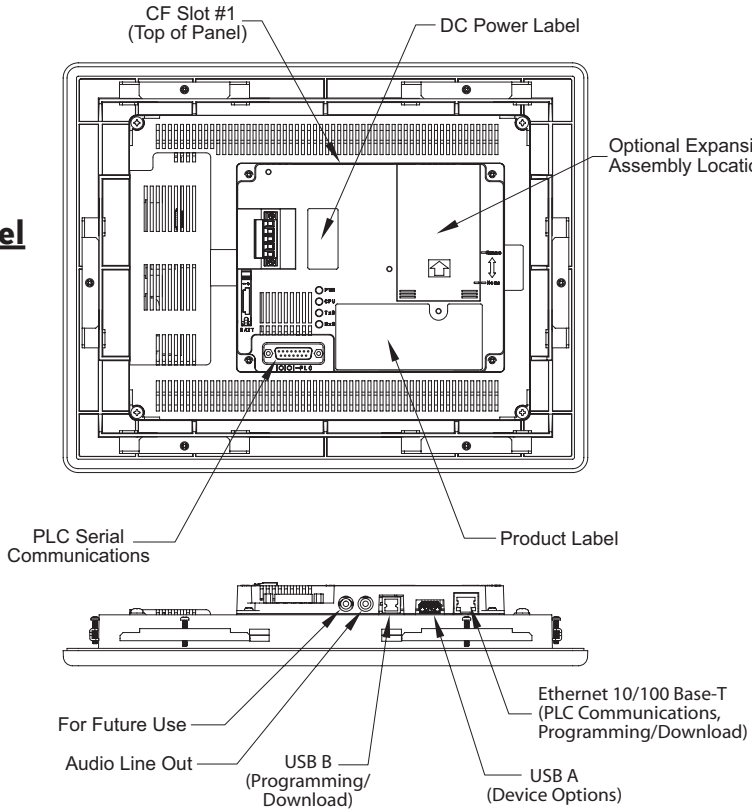

EA7-T12C

Dimensions:

All the necessary mounting hardware is provided with the touch panel. Use the six (6) mounting clips and screws to secure the touch panel to the cabinet or enclosure surface. A template is provided for marking the cutout dimensions on the mounting surface.

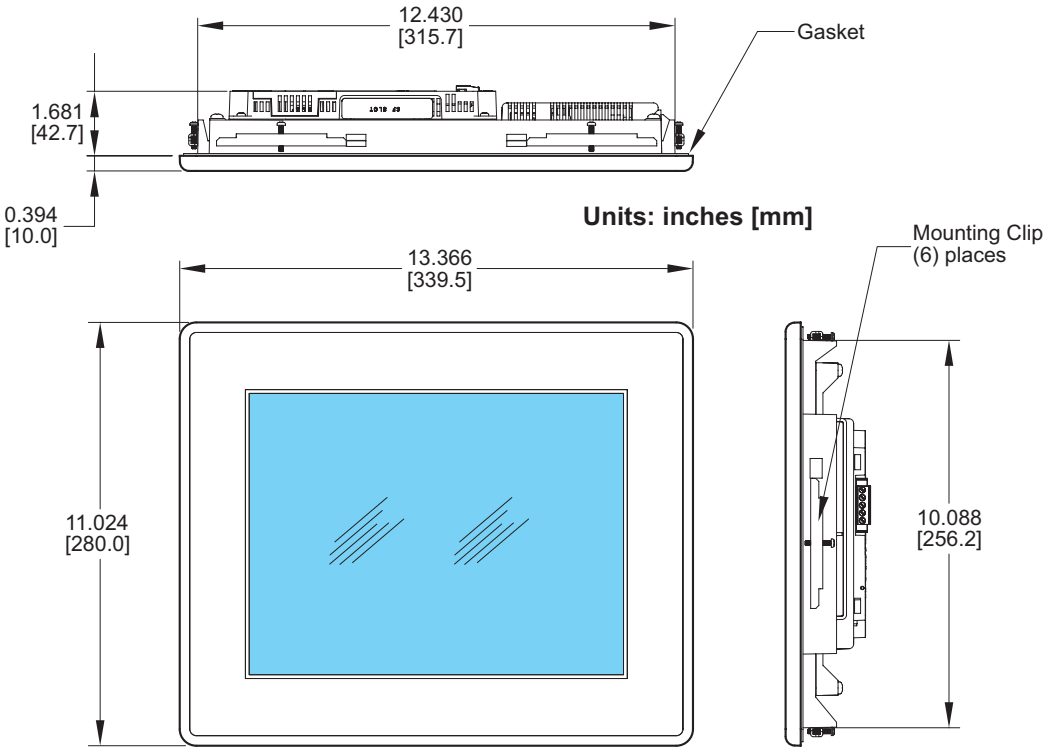

Enclosure Mounting Thickness Ranges and Mounting Clip Screw Torque

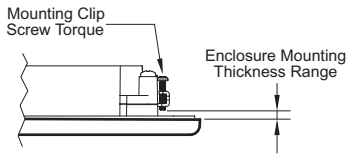

Touch Panel Size	Enclosure Thickness Range	Mounting Clip Screw Torque
8", 10", 12" & 15"	0.039 - 0.20 inch [1 – 5 mm]	42 ~ 57 oz-in [0.3 ~ 0.4 Nm]

EA7-T12C

Ports & Memory Expansion:

Full Feature Model
EA7-T12C

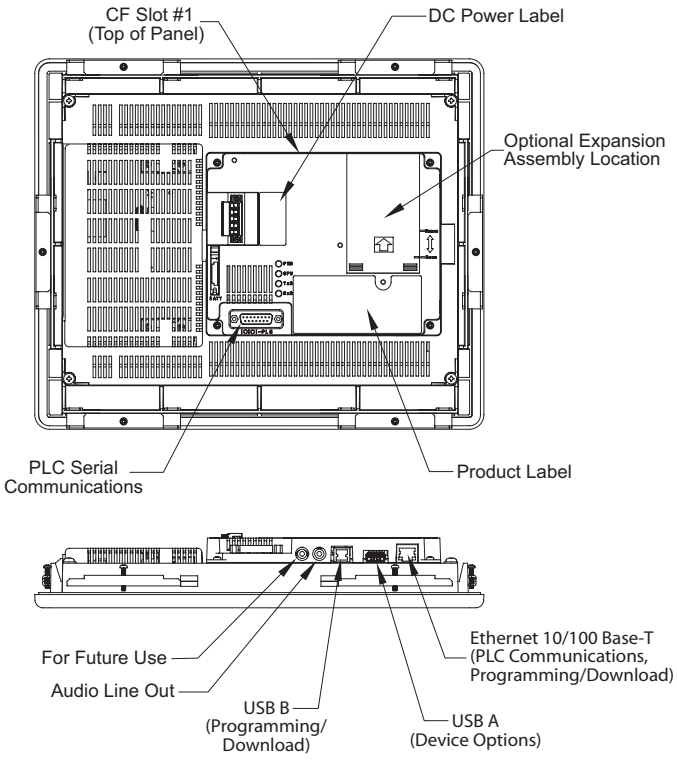

EA7-T15C

Dimensions:

All the necessary mounting hardware is provided with the touch panel. Use the eight (8) mounting clips and screws to secure the touch panel to the cabinet or enclosure surface. A template is provided for marking the cutout dimensions on the mounting surface.

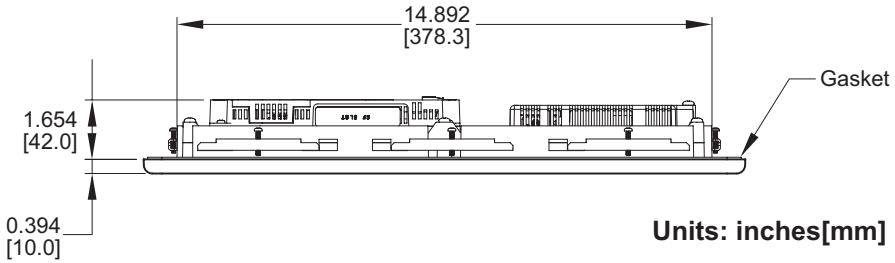

Units: inches[mm]

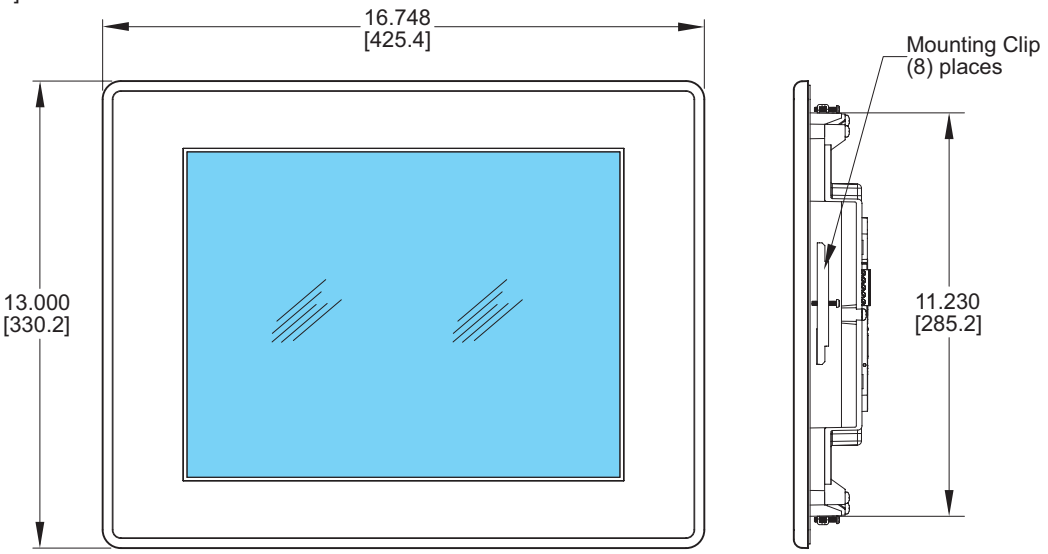

Enclosure Mounting Thickness Ranges and Mounting Clip Screw Torque

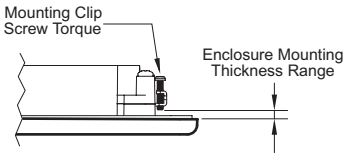

Touch Panel Size	Enclosure Thickness Range	Mounting Clip Screw Torque
8", 10", 12" & 15"	0.039 - 0.20 inch [1 – 5 mm]	42 ~ 57 oz-in [0.3 ~ 0.4 Nm]

EA7-T15C

Ports & Memory Expansion:

Full Feature Model
EA7-T15C

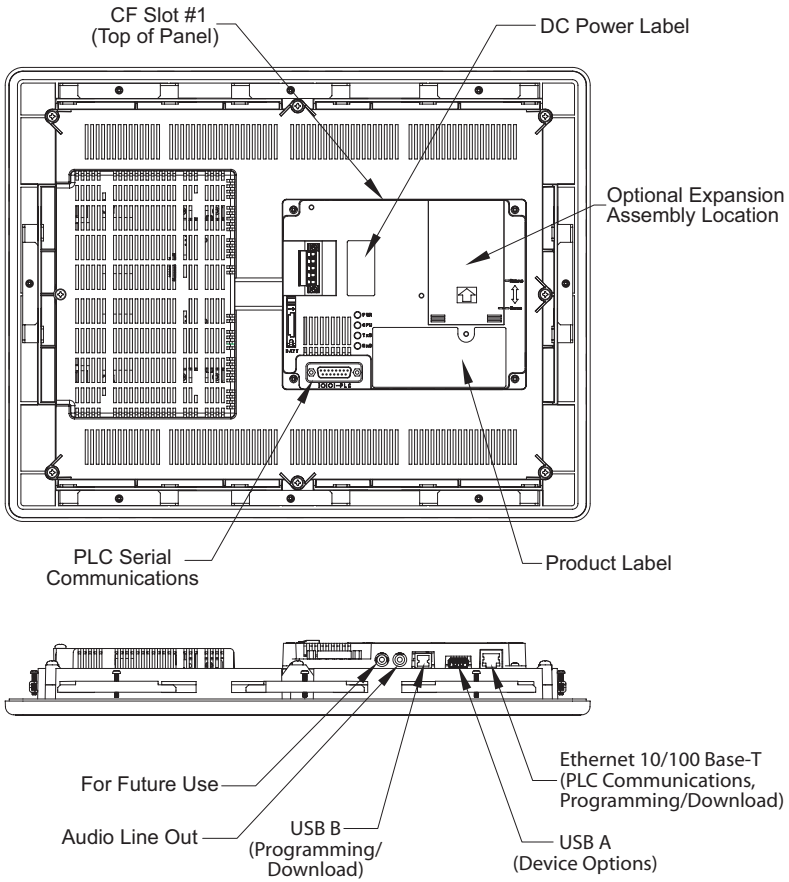

Mounting Clearances

The following drawing shows the mounting clearances for the *C-more* touch panel. There should be a minimum of 4 inches of space between all sides of the panel and the nearest object or obstruction and at least 2 inches between the rear of the panel and the nearest object or obstruction.

Note: *Make sure the touch panel is mounted on a vertical surface to allow convection air flow for proper cooling.*

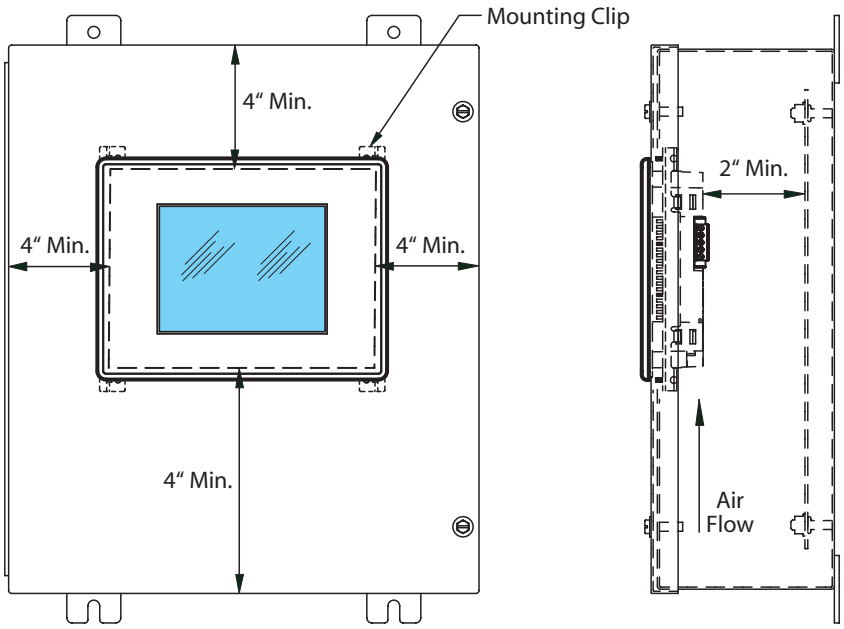

Front View

Side View

Communications Ports

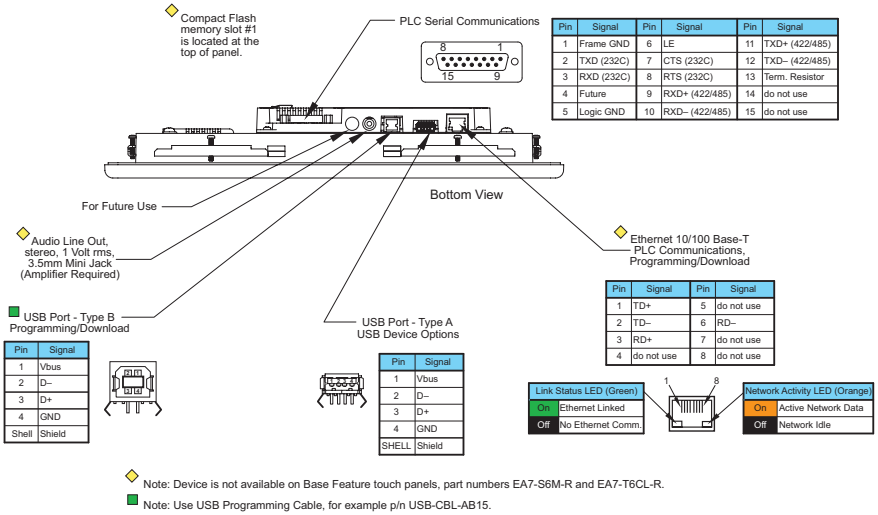

Pin	Signal	Pin	Signal	Pin	Signal
1	Frame GND	6	LE	11	TXD+ (422/485)
2	TXD (232C)	7	CTS (232C)	12	TXD– (422/485)
3	RXD (232C)	8	RTS (232C)	13	Term. Resistor
4	Future	9	RXD+ (422/485)	14	do not use
5	Logic GND	10	RXD– (422/485)	15	do not use

Pin	Signal
1	Vbus
2	D–
3	D+
4	GND
Shell	Shield

Pin	Signal
1	Vbus
2	D–
3	D+
4	GND
SHELL	Shield

Pin	Signal	Pin	Signal
1	TD+	5	do not use
2	TD–	6	RD–
3	RD+	7	do not use
4	do not use	8	do not use

Link Status LED (Green)	
On	Ethernet Linked
Off	No Ethernet Comm.

Network Activity LED (Orange)	
On	Active Network Data
Off	Network Idle

Ethernet Port

The Ethernet port can be used several ways: for programming the panel (downloading a project), for PLC communication, and for the advanced features, such as sending e-mail, web server, FTP access, and allowing users to access and control the panel remotely.

The Ethernet connector is an RJ-45 Module jack type. It has a green and an orange LED.

- The orange LED indicates the Ethernet communication status. It illuminates when there is data activity on the network.
- The green LED indicates link status and illuminates when a link is established.

Ethernet connections to devices:

- *Direct*LOGIC Ethernet
- Productivity3000 Ethernet
- Modbus TCP/IP
- Allen-Bradley EtherNet/IP™ Server - Generic I/O Messaging (ControlLogix™, CompactLogix™, and FlexLogix™)
- Allen-Bradley EtherNet/IP Client - Tag Based (ControlLogix, CompactLogix, and FlexLogix)
- Allen-Bradley EtherNet/IP Client - (MicroLogix and SLC5)
- Entivity Modbus TCP/IP
- Mitsubishi Q/QnA Ethernet
- Omron Ethernet FINS
- Siemens Ethernet ISO over TCP

Note: *The base panels (-R part numbers) do not include an Ethernet port, and do not have these capabilities.*

Refer to http://cmore.automationdirect.com for the latest driver information.

Communications Ports (cont'd)

USB Port B

Program *C-more* via the USB programming port. It's fast and easy, with no baud rate settings, parity, or stop bits to worry about. We stock standard USB cables for your convenience, such as part no. USB-CBL-AB15. USB Port B can be used to upload or download projects to and from a PC (personnel computer).

USB Port A

The Universal Serial Bus (USB) type A port is a standard feature for all models and can be used to connect various USB 1.1 HID (Human Input Device) devices to the panel, such as:

- USB pen drives
- USB keyboards
- USB barcode scanners
- USB card scanners

C-more can log data to the USB pen drive as well as load projects to the panel from the pen drive. You can also back up project files and panel firmware.

Sound Interface (Audio Line Out)

When attached to an amplifier and speaker(s), *C-more* can play warning sounds, or pre-recorded messages such as: "conveyor is jammed". *C-more* supports WAV type files. The output is stereo. See the next page for the WAV file specifications. Various "Objects" in the *C-more* programming software support sounds. Sound files are stored in the sound library. See the *C-more* programming software help support for additional details.

PLC Port

The PLC port is an RS-232C, RS-422A or RS-485A female 15-pin D-sub connector. Use this port for serial connections to PLCs. The port supports the following PLC protocols:

- All *AutomationDirect.com* PLCs:
  - Productivity3000
  - CLICK
  - *Direct*LOGIC K-sequence
  - *Direct*NET
  - Modbus (Koyo Addressing)
- Allen Bradley:
  - DF1 Full & Half Duplex
  - DF1 Full & Half Duplex - Tag Based
  - PLC5 DF1
  - DH485
- Modbus RTU
- Entivity Modbus RTU
- GE SNPX (90/30, 90/70, Micro 90, VersaMax Micro)
- Omron:
  - Host Link (C200 Adapter, C500)
  - FINS (CJ1, CS1)
- Mitsubishi
  - Melsec FX
  - QnA
- Siemens PPI (S7-200 CPU)

Audio WAV File Specifications

The *C-more* Audio Line Out port supports the following WAV file specifications:

Audio Format (codec): PCM

Audio Sample Rate: 11 kHz, 22 kHz or 44 kHz

Channels: 1 (mono) or 2 (stereo)

Audio Sample Size: 8-bit or 16-bit

Memory Organization

The following diagram outlines the relationships between the internal memory of the panel and any external memory device. It also shows how the various memory areas can be used for different functions. The 6", 8" and 10" panels have a project area of **10 MB**, while the 12" and 15" panels have a **40 MB** project area.

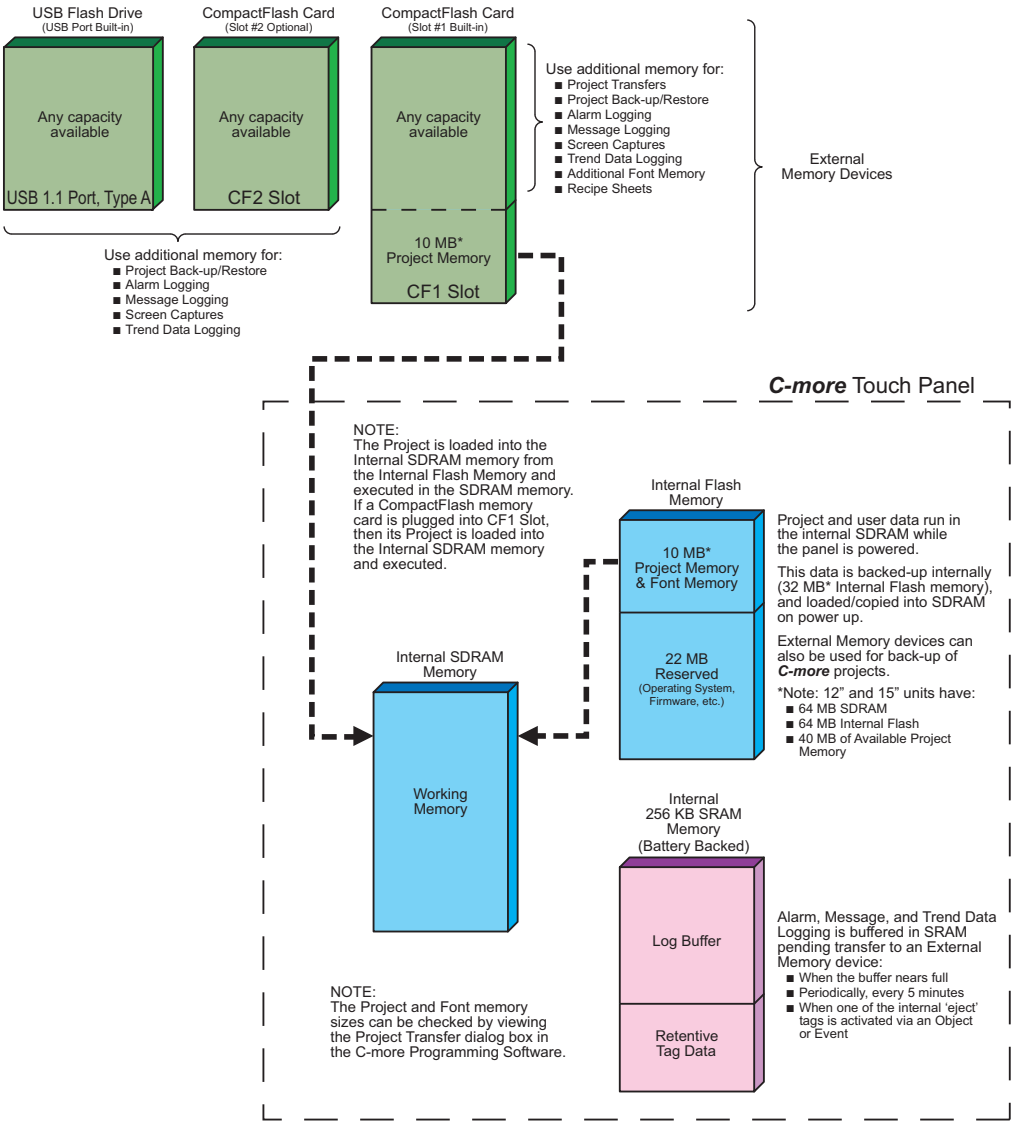

Handling External Memory Devices

Consider the following to prevent data error risk when utilizing data logging.

- Do not turn off power to the *C-more* touch panel at any time the external memory device is being accessed.
- Do not remove any external memory device when the device is being accessed by the touch panel.

Note: *A system tag, such as* ***SYS %device% WriteStatus*** *can be used to detect when the external memory device is being accessed. See the* ***C-more*** *programming software on-line help for additional information on* ***System Tag Names****.*

- If a CompactFlash memory card is plugged into the CF1 slot while the panel is running, the project will continue to run from the project that is currently in the internal SDRAM. If power is cycled and there is a good project stored on the CompactFlash, then that project will be loaded into the internal SDRAM and ran.
- Be sure to backup the memory device at regular intervals.
- A CompactFlash memory card plugged into the CF1 slot that includes a project that is being run cannot be used for backup.
- If you suspect the memory device is bad, you may want to use a PC to re-format the device, or use a known good memory device.

Note: *The* ***C-more*** *touch panel requires that all external memory devices be formatted with a* ***FAT*** *or* ***FAT32*** *file system. The* ***FAT*** *file system is recommended for better performance.*

- The number of times the memory device can be written to is limited, approximately 300,000 times. Consequently, frequent writing at short intervals may shorten the service life of the memory device. Try to use as long as possible sampling times for logging data to reduce the amount of times the memory device is accessed.

Power Loss Detection and Power Retention Period

It is important to have an understanding of how the touch panel handles power loss as it applies to data logging and retentive name tag data. The ***C-more*** touch panel system CPU will receive a power loss interrupt signal when the incoming DC voltage level drops below 19.2 VDC. If using the optional AC/DC Power Adapter, EA-AC, then an interrupt signal will occur when the incoming AC voltage level drops below 58 VAC (+/- 5%). When power loss is detected, the backlight will turn off immediately to allow extending the power retention period. Any logging to either CompactFlash memory or an USB pen drive will also stop. This will allow time to complete writing any data to the internal 256 KB SRAM. The 256 KB SRAM along with CPU Date/Time registers are battery backed.

Because the 24 VDC power retention time period is very short, only data backup to the internal 256 KB SRAM memory buffer can occur. When power is restored, the contents of the SRAM will be written to the selected memory storage device.

Data Logging Function and Logging Media

Considering the power retention period and the CF card write performance, the EA-CF-CARD memory card is recommended to minimize data loss. It is also recommended to further reduce the risk of losing data, a uninterruptible power supply (UPS) should be used to provide power to the touch panel.

Data Logging - Memory Device Full

The following explains what occurs when logging data from an object, such as Line Trending, and the memory device becomes full. The memory device can be a USB pen drive plugged into the USB port, or a CompactFlash memory card plugged into location CF1 or CF2.

The answer is when the memory device that is being used for logging is full, the panel will stop writing to the log and a RTE-001 Runtime Error will be displayed on the screen. The displayed error message will read “Log Failed. Not enough Memory Space in %Device%”. (%Device% can be USB, CF1, or CF2.) The data logging object will continue to execute.

The user can monitor the System Tag “SYS %DEVICE% FreeMemory” with the Event Manager, and display a message to the operator to warn when the memory device is close to full.

The user can also use a Pushbutton object with the tag “SYS Copy Log to %Device%” to copy ALL logs on ALL other devices to %Device% and therefore save the current data.

For example, if the application is logging to CF1 and CF2, the user can monitor “SYS CF1 FreeMemory” and “SYS CF2 FreeMemory” in the Event Manager. When the value of either gets below a set value in the Event Manager, then the Event Manger can issue an Alarm, send an email, etc. The operator can then insert a USB pen drive into the panel’s USB port, and press a pushbutton that is configured with System Tag “SYS Copy Log to USB”. This action will copy all of the logged data to the USB pen drive from both CF1 and CF2. The operator can then use the System Setup Screen’s Memory selection to clear both CompactFlash CF1 and CF2.

This example can work with different combinations of the memory devices, but the preferred method is using a USB pen drive because it is the easiest device to insert and remove.

Chemical Compatibility

The *C-more* touch panels comprise three different materials that may be exposed to outside elements: a gasket, a screen sheet and a bezel.

The *C-more* panel serial number can be found on the label on the back of the panel. It has the format MODEL NUMBER + yymddBsss. The characters yym represent the year and month of manufacture. These are the characters that determine the materials used in construction of your panel as follows:

All panel gaskets are Silicone

Panel Size	Date Code	Screen Sheet Material	Bezel Frame Material
6 inch	05m through 077	PET	ABS
	078 through 112	PC	
	113 through current	PET	
8 inch	05m through 077	PET	
	078 through 082	PC	
	083 through current		PPE/PS
10 inch	05m through 077	PET	ABS
	078 through 081	PC	
	082 through current		PPE/PS
12 and 15 inch	05m through 077	PET	ABS
	078 through 081	PC	
	082 through 096		PPE/PS
	097 through current	PET	

Chemical compatibility tables begin on the next page.

Chemical Compatibility (cont'd)

The following tables are provided to make you aware of the general compatibility between chemicals that may be present in your work environment and the various materials used in the manufacture of the panel. Use the table to determine those chemicals that are safe to use around your *C-more* touch panel and those that may harm it. The tables are made up of specifications provided by the manufacturer of the listed material. The tables rate these chemicals as either Excellent, Good, Not Recommended, or Not Usable. Because the ratings are for ideal conditions at room temperature, consider all factors when evaluating your application. Areas left blank have not been tested by the manufacturer and therefore information of compatibility is not available.

The values in [**brackets**] represent the chemical's density at room temperature, 20 °C.

Chemicals	Screen Sheet – PET [Density %, Temperature °C]	Screen Sheet – PC [Density %, Temperature °C]	Bezel – ABS [Density %, Temperature °C]	Bezel – PPE / PS [Density %, Temperature °C]	Gasket – Silicone [Density %, Temperature °C]
Acetaldehyde			Not Recommended	Not Usable	
Acetic Acid			[10, 20 °C] Excellent		
			[10, 20 °C] Excellent		
	[Glacial] Excellent		[50, 20 °C] Not Usable		
			[50-70, 20 °C] Not Usable		
			[100, 20 °C] Not Usable		
Acetic anhydride			Not Recommended		
Acetone	Excellent	Not Usable	Not Usable	Not Usable	
Acetophenone			Not Usable	Not Usable	
Acetylene			Excellent		
Acrylonitrile			Not Recommended	Not Usable	
Alcohol - Butyl Ether					Excellent
Alcohol - Ethanol					Excellent
Alcohol - Isopropyl					Excellent
Alums NH3, Cr, K			Excellent		
Aluminum acetate			Excellent		
Aluminum bromide			Good		
Aluminum chloride			Good		
Aluminum nitrate			Excellent		
Aluminum sulfate			Excellent		
Ammonia [anhydrous] (10%)			Good	Good	Good
Ammonia gas [cold]			Good		
Ammonia liquid			Good		

Table continued at top of next page.

Chemical Compatibility (cont'd)

Chemicals	Screen Sheet – PET [Density %, Temperature °C]	Screen Sheet – PC [Density %, Temperature °C]	Bezel – ABS [Density %, Temperature °C]	Bezel – ABS [Density %, Temperature °C]	Gasket – Silicone [Density %, Temperature °C]
Ammonia water	[12%] Not Usable		[12%] Not Usable		
	[28%] Not Usable		[28%] Not Usable		
Ammonium carbonate			Excellent		
Ammonium chloride			Excellent		
Ammonium hydroxide [ammonia water]			Excellent		
Ammonium nitrate			Excellent		
Ammonium nitrite			Excellent		
Ammonium persulfate			Excellent		
Ammonium phosphate			Excellent		
Ammonium sulfate			Excellent		
Amyl acetate			Not Usable		
Amyl alcohol			Good		
Aniline dyes			Not Recommended		
Animal oil [lard]			Good		
Aqua regia			Not Usable		
Arsenic acid			Not Recommended		
Asphalt			Excellent		
Barium chloride			Excellent		
Barium hydroxide			Excellent		
Barium sulfate			Excellent		
Barium sulfide			Excellent		
Beer			Excellent	Good	
Beet sugar liquors			Excellent		
Benzaldehyde			Not Recommended	Not Usable	
Benzene [Benzol]			Not Recommended	Not Usable	
Benzene	Excellent			Not Usable	Not Usable
Benzine			Not Usable	Not Usable	
Benzyl alcohol			Not Recommended	Not Usable	
Benzyl benzoate			Not Usable	Not Usable	
Benzyl chloride			Not Usable	Not Usable	
Borax			Excellent		
Boric acid			Good		
Bromine			Not Usable		
Butane			Excellent		

Table continued at top of next page.

Chemical Compatibility (cont'd)

Chemicals	Screen Sheet – PET [Density %, Temperature °C]	Screen Sheet – PC [Density %, Temperature °C]	Bezel – ABS [Density %, Temperature °C]	Bezel – ABS [Density %, Temperature °C]	Gasket – Silicone [Density %, Temperature °C]
Butter			Good		
Butyl acetate			Not Usable	Not Usable	
Butyl acrylate			Not Usable	Not Usable	
Butyl alcohol [Butanol]			Good	Good	
Butyl Cellosolve		Not Usable			
Calcium actetate			Excellent		
Calcium bisulfite			Good		
Calcium chloride			Excellent		
Calcium hydroxide			Excellent		
Calcium hypochlorite			[20,RT] Excellent		
Calcium nitrate			Excellent		
Calcium sulfide			Excellent		
Cane sugar liquors			Excellent	Good	
Carbon dioxide			Excellent		
Carbon disulfide			Not Usable		
Carbonic acid			Good		
Carbon tetrachloride	Excellent		Not Usable	Not Usable	
Castor oil			Not Recommended	Not Usable	
China wood [tung] oil			Excellent	Not Usable	
Chlorine gas [dry]			Not Usable		
Chlorine gas [wet]			Not Usable		
Chlorine liquid			Not Usable		
Chlorinated solvents			Not Usable	Not Usable	
Chloroacetic acid			Not Usable	Not Usable	
Chloroacetone			Not Usable	Not Usable	
Chloroform	Excellent		Not Usable	Not Usable	
Chlorophenol	Not Usable			Not Usable	
Chlorosulfonic acid			Not Usable	Not Usable	
Chlorotoluene			Not Usable	Not Usable	
Chromic acid			[2, 70 °C] Not Usable	[2, 70 °C] Not Usable	
			[5, 70 °C] Not Usable	[5, 70 °C] Not Usable	
			[10, 70 °C] Not Usable	[10, 70 °C] Not Usable	
			[25, 70 °C] Not Usable	[25, 70 °C] Not Usable	
Citric acid			Good		

Table continued at top of next page.

Chemical Compatibility (cont'd)

Chemicals	Screen Sheet – PET [Density %, Temperature °C]	Screen Sheet – PC [Density %, Temperature °C]	Bezel – ABS [Density %, Temperature °C]	Bezel – ABS [Density %, Temperature °C]	Gasket – Silicone [Density %, Temperature °C]
Cocoanut oil			Good	Not Usable	
Copper chloride			Excellent		
Copper cyanide			Excellent		
Copper sulfate			Excellent		
Corn oil			Good	Not Usable	
Cottonseed oil			Good	Not Usable	
Creosol			Not Usable	Not Usable	
Cyclohexane			Good	Not Usable	
Cyclohexanol			Good	Not Usable	
Cyclohexanone		Not Usable	Not Usable	Not Usable	
Developing solutions [Hypos]			Excellent		
Dibutyl phthalate [DBP]			Not Usable	Not Usable	
Dichlorobenzene			Not Usable	Not Usable	
Diethylene glycol			Good	Not Usable	
Diethyl ether			Not Usable	Not Usable	
Disopropyl ketone			Not Usable	Not Usable	
Dimethyl aniline			Not Usable	Not Usable	
Dimethyl formamide			Not Usable	Not Usable	
Dioxane			Not Usable	Not Usable	
Dipentene			Not Usable	Not Usable	
Epichlorohydrine			Not Usable	Not Usable	
Ethyl acetate	Excellent		Not Usable	Not Usable	
Ethyl acetoacetate			Not Usable	Not Usable	
Ethyl acrylate			Not Usable	Not Usable	
Ethyl alcohol			Not Recommended	Good	
Ethyl benzene			Not Usable	Not Usable	
Ethyl chloride			Not Usable	Not Usable	
Ethylene chlorohydrin			Not Usable	Not Usable	
Ethylene diamine			Not Usable	Not Usable	
Ethylene dichloride			Not Usable	Not Usable	
Ethylene glycol			Excellent	Good	
Ethylene oxide			Not Usable	Not Usable	
Fatty acid			Good	Not Usable	
Ferric chloride			Excellent		

Table continued at top of next page.

Chemical Compatibility (cont'd)

Chemicals	Screen Sheet – PET [Density %, Temperature °C]	Screen Sheet – PC [Density %, Temperature °C]	Bezel – ABS [Density %, Temperature °C]	Bezel – ABS [Density %, Temperature °C]	Gasket – Silicone [Density %, Temperature °C]
Ferric nitrate			Excellent		
Ferric sulfate			Excellent		
Fluorboric acid			Not Recommended		
Fluorobenzene			Not Usable	Not Usable	
Fluosilicic acid			Not Recommended		
Formaldehyde			[40, 20 °C] Good	[40, 20 °C] Not Usable	
Formic acid			[25, 20 °C] Excellent		
			[50, 20 °C] Good		
			[90, 20 °C] Not Recommended		
Freon	[45°C] Excellent				
Freon 11			Not Recommended		
Freon 12			Good		
Freon 113			Not Usable		
Freon 114			Not Recommended		
Fuel oil			Good		
Gasoline (Leaded)		Good	Not Recommended	Not Usable	Not Usable
Gasoline (Unleaded)		Good	Not Recommended	Not Usable	Not Usable
Gelatin			Excellent		
Glauber's salt			Excellent		
Glucose			Excellent		
Glue			Excellent		
Glycerin			Excellent	Good	
Grease			Excellent	Good	
Hexane			Not Recommended	Not Usable	
Hexyl alcohol			Good	Not Usable	
Hydrobromic acid			[20, 20 °C] Not Usable		
			[20-70, 20 °C] Not Usable		
			[37, 20 °C] Not Usable		
Hydrochloric acid	[18%] Excellent		[10, 20 °C] Excellent	[10, 20 °C] Good	Good
			[20, 20 °C] Good		
	[35%] Good	[35%] Good	[20-80, 20 °C] Not Recommended		
			[38,20 °C] Not Recommended		

Table continued at top of next page.

Chemical Compatibility (cont'd)

Chemicals	Screen Sheet – PET [Density %, Temperature °C]	Screen Sheet – PC [Density %, Temperature °C]	Bezel – ABS [Density %, Temperature °C]	Bezel – ABS [Density %, Temperature °C]	Gasket – Silicone [Density %, Temperature °C]
Hydrocyanic acid			Excellent		
Hydrofluoric acid			[10, 20 °C] Excellent		
			[20, 20 °C] Excellent		
			[40, 20 °C] Good		
Hydrofluoric acid anhydrous			Not Usable		
Hydrogen			Excellent		
Hydrogen peroxide			[5, 20 °C] Not Recommended		
			[5-50, 20 °C] Not Recommended		
			[30, 20 °C] Not Usable		
Hydrogen sulfide			Excellent		
Hydorquinone			Not Recommended		
Hypochlorous acid			Not Recommended		
Isobutyl alcohol		Good	Good	Good	
Isopropyl acetate			Not Usable	Not Usable	
Isopropyl alcohol			Good	Good	
JP fuels (1-6)			Good	Not Usable	
Kerosene			Good	Not Usable	
Lacquer			Not Usable		
Lactic acid			Excellent		
Lard			Excellent		
Lead acetate			Excellent		
Lead nitrate			Good		
Lead sulfamate			Good		
Linoleic acid			Excellent		
Linseed oil			Excellent	Not Usable	
Liquified petroleum gas [LPG]			Excellent		
Lubricating oil			Excellent		
Lye solution			Excellent		
Magnesium chloride			Excellent		
Magnesium hydroxide			Excellent		
Magnesium sulfate			Excellent		
Maleic acid			Excellent		

Table continued at top of next page.

Chemical Compatibility (cont'd)

Chemicals	Screen Sheet – PET [Density %, Temperature °C]	Screen Sheet – PC [Density %, Temperature °C]	Bezel – ABS [Density %, Temperature °C]	Bezel – ABS [Density %, Temperature °C]	Gasket – Silicone [Density %, Temperature °C]
Marcuric chloride			Excellent		
MEK		Not Usable	Not Usable	Not Usable	
Mercury			Excellent		
Metacresol	Not Usable				
Methylene Chloride		Not Usable			
Methyl acetate			Not Usable	Not Usable	
Methyl alcohol	Excellent		Not Recommended	Not Usable	
Methyl Benzoate	Not Usable				
Methyl chloride			Not Usable	Not Usable	
Methyl ethyl ketone [MEK]		Not Usable	Not Usable	Not Usable	
Methyl isobutyl ketone [MIBK]			Not Usable	Not Usable	
Methyl methacrylate			Not Usable	Not Usable	
Methyl dichloride			Not Usable	Not Usable	
Methyl Salicylate	Not Usable				
Milk			Excellent		
Mineral oil			Excellent		Excellent
Monochlorobenzene	Not Usable		Not Usable	Not Usable	
Naptha			Good		
Napthalene			Excellent		
Napthenic acid			Good		
Natural gas			Excellent		
Natural oil					Excellent
Nickel acetate			Excellent		
Nickel chloride			Excellent		
Nickel sulfate			Excellent		
Nitric acid	[35%] Good		[10, 20 °C] Good	[10, 20 °C] Not Usable	
			[10-70, 20 °C] Not Usable	[10-70, 20 °C] Not Usable	
			[30, 20 °C] Not Usable	[30, 20 °C] Not Usable	
	[60%] Not Usable		[30-70, 20 °C] Not Usable	[30-70, 20 °C] Not Usable	
			[61.3, 20 °C] Not Usable	[61.3, 20 °C] Not Usable	
			[Vapor, 20 °C] Not Usable	[Vapor, 20 °C] Not Usable	

Table continued at top of next page.

Chemical Compatibility (cont'd)

Chemicals	Screen Sheet – PET [Density %, Temperature °C]		Bezel – ABS [Density %, Temperature °C]	Bezel – ABS [Density %, Temperature °C]	Gasket – Silicone [Density %, Temperature °C]
Nitrobenzene	Not Usable		Not Usable	Not Usable	
Nitroethane			Not Usable	Not Usable	
Nitromethane			Not Usable	Not Usable	
Nitropropane			Not Usable	Not Usable	
Nitrogen			Excellent	Good	
Octyl alcohol			Good		
Oleic acid			Excellent	Not Usable	
Olive oil			Excellent	Not Usable	
Oxalic acid			Excellent		
Oxygen			Excellent		
Ozone			Not Recommended		
Palmitic acid			Excellent		
Perchloroethylene			Not Usable	Not Usable	
Petroleum			Excellent	Not Usable	
Phenol	Not Usable		Not Usable	Not Usable	
Phospheric acid			[50, 20 °C] Good		
			[50-70, 20 °C] Not Usable		
			[75, 20 °C] Not Usable		
Pickling solution			[Sulfuric acid 20% + nitric acid 4%] Good		
			[Sulfuric acid 40% + nitric acid 15%] Not Recommended		
Pine oil			Good		
Potassium chloride			Excellent		
Potassium cyanide			Excellent		
Potassium dichromate			[10, 20 °C] Excellent		
Potassium hydroxide	[10%] Not Usable		Excellent		
Potassium nitrate			Excellent		
Potassium permangante			[5, 20 °C] Excellent		
Potassium sulfate			Excellent		
Propane			Excellent		
Propyl acetate			Not Usable	Not Usable	
Propyl alcohol			Good	Good	
Salt water			Excellent	Good	

Table continued at top of next page.

Chemical Compatibility (cont'd)

Chemicals	Screen Sheet – PET [Density %, Temperature °C]	Screen Sheet – PC [Density %, Temperature °C]	Bezel – ABS [Density %, Temperature °C]	Bezel – ABS [Density %, Temperature °C]	Gasket – Silicone [Density %, Temperature °C]
Silicone oils			Good	Good	
Silver nitrate			Excellent		
Skydrol 500			Not Usable		
Skydrol 7000			Not Usable		Not Usable
Soap solutions			Excellent		
Soda ash			Excellent		
Sodium bicarbonate			Excellent		
Sodium bisulfate			Good		
Sodium borate			Excellent		
Sodium carbonate	[10%] Excellent				
Sodium chloride			Excellent	Good	
Sodium cyanide			Excellent		
Sodium hydroxide	[40%] Not Usable	[40%] Not Usable	[10, 20 °C] Excellent		Good
			[30, 20 °C] Excellent		
			[30-70, 20 °C] Not Usable		
Sodium hypochlorite			[5, 20 °C] Excellent		
			[5-70, 20 °C] Not Usable		
Sodium metaphosphate			Excellent		
Sodium nitrate			Excellent		
Sodium perborate			Excellent		
Sodium peroxide			Not Usable		
Sodium phosphate			Excellent		
Sodium thiosulfate			Excellent		
Sodium sulfate [Glauber's salt]			Good		
Sodium sulfite			Excellent		
Soybean oil			Excellent		
Stannic chloride			Good		
Steam			[below 150 degrees] Not Usable		
			[above 150 degrees] Not Usable		
Stearic acid			Excellent		
Styrene			Not Recommended	Not Usable	
Sucrose solutions			Excellent	Good	

Table continued at top of next page.

Chemical Compatibility (cont'd)

Chemicals	Screen Sheet – PET [Density %, Temperature °C]	Screen Sheet – PC [Density %, Temperature °C]	Bezel – ABS [Density %, Temperature °C]	Bezel – ABS [Density %, Temperature °C]	Gasket – Silicone [Density %, Temperature °C]
Sulfur			Excellent		
Sulfur dioxide			Good		
Sulfuric acid	[40%] Excellent		[10, 20 °C] Excellent	[10, 20 °C] Good	Not Usable
			[10-70, 20 °C] Not Usable		
	[60%] Excellent		[30, 20 °C] Excellent		
			[30-70, 20 °C] Not Recommended		
	[70%] Excellent		[98, 20 °C] Not Usable		
			[Vapor, 20 °C] Not Usable		
	[80%] Not Usable				
Sulpherous acid			[10, 20 °C] Good		
Tannic acid			Good		
Tar			Not Recommended		
Tartaric acid			Excellent		
Terpineol			Not Recommended		
Tetrachloroethane	Excellent		Not Usable		
Tetraethyl lead			Good	Not Usable	
Tetralin	Not Usable				
Tetrahydrofuran			Not Usable	Not Usable	Not Usable
Thionyl chloride			Not Usable	Not Usable	
Toluene		Not Usable	Not Usable	Not Usable	Not Usable
Trichloroethylene [Trichlene]			Not Usable	Not Usable	
Triethanol amine			Good	Not Usable	
Turpentine oil			Good	Not Usable	
Vegetable oil			Good	Not Usable	
Vinegar			Excellent	Good	
Water			Excellent	Good	
Whiskey			Excellent		
Xylene	Excellent	Not Usable	Not Usable	Not Usable	
Zeolites			Excellent		
Zinc acetate			Excellent		
Zinc chloride			Excellent		
Zinc sulfate			Excellent		

ACCESSORIES

In This Chapter...

Accessories 3–2
Accessories Overview 3–3
Accessories at a Glance 3–4
AC/DC Power Adapter – EA-AC 3–5
Expansion Assembly – EA-EXP-OPT 3–9
CF Card Interface Module – EA-CF-IF 3–12
CompactFlash Memory – EA-CF-CARD 3–14
6" Adapter Plate – EA-6-ADPTR 3–17
D-SUB 15-pin 90 degree Comm Port Adapter – EA-ADPTR-4 3–19
D-SUB 15-pin to Terminal Block Adapter – EA-COMCON-3 3–20
Non-glare Screen Covers – EA-xx-COV2, xx = 6, 8, 10, 12 or 15 3–22

Accessories

Part Number	Description	Part Number	Description
EA-AC	The AC/DC Power Adapter, EA-AC, is for ***C-more*** touch panels only, and is powered from a 100-240 VAC, 50/60 Hertz power source. The adapter provides 24 VDC @ 1.5 A. Power Fault features help protect data being logged to CompactFlash during power failures. The ***C-more*** panel must have firmware version 1.21 Build 6.18E or higher for proper operation.	**EA-COMCON-3**	D-SUB 15-pin to 6-terminal PLC serial communication port adapter to allow wire terminal connections for RS-422/485 PLC communication cable.
EA-EXP-OPT	Expansion Assembly, is used to allow installation of the optional CF Card Interface Module for CF card use and also provides a slot for future option modules.	**EA-6-COV2**	Non Glare 6 Inch Screen Cover, protective overlay used to protect the touch screen while helping to reduce the glare from external light sources. (pk of 3)
EA-CF-IF	CF Card Interface Module, is used with the Expansion Assembly to allow use of CF cards, such as the CompactFlash Memory, p/n EA-CF-CARD.	**EA-8-COV2**	Non Glare 8 Inch Screen Cover, protective overlay used to protect the touch screen while helping to reduce the glare from external light sources. (pk of 3)
EA-CF-CARD	CompactFlash Memory Card Option, industrial grade, high speed memory for non-volatile storage.	**EA-10-COV2**	Non Glare 10-Inch Screen Cover, protective overlay used to protect the touch screen while helping to reduce the glare from external light sources. (pk of 3)
EA-6-ADPTR	6 Inch Adapter Plate, allows C-more 6" touch panels to be mounted into EZTouch 6" non-slim bezel cutouts without having to make alterations. NEMA 4/4X.	**EA-12-COV2**	Non Glare 12-Inch Screen Cover, protective overlay used to protect the touch screen while helping to reduce the glare from external light sources. (pk of 3)
EA-ADPTR-4	D-SUB 15-pin 90 degree PLC serial communication port adapter to allow a PLC communication cable to be plugged in at a 90 degree angle to reduce panel depth requirements.	**EA-15-COV2**	Non Glare 15-Inch Screen Cover, protective overlay used to protect the touch screen while helping to reduce the glare from external light sources. (pk of 3)

WARNING: Do NOT use EZTouch RAM or Flash memory cards with the *C-more* touch panels.

Accessories Overview

***NOTE**: CompactFlash memory card designations – CF Slot #1 is at the top of the panel and CF Slot #2 is the CF Card Interface Module, EA-CF-IF.*

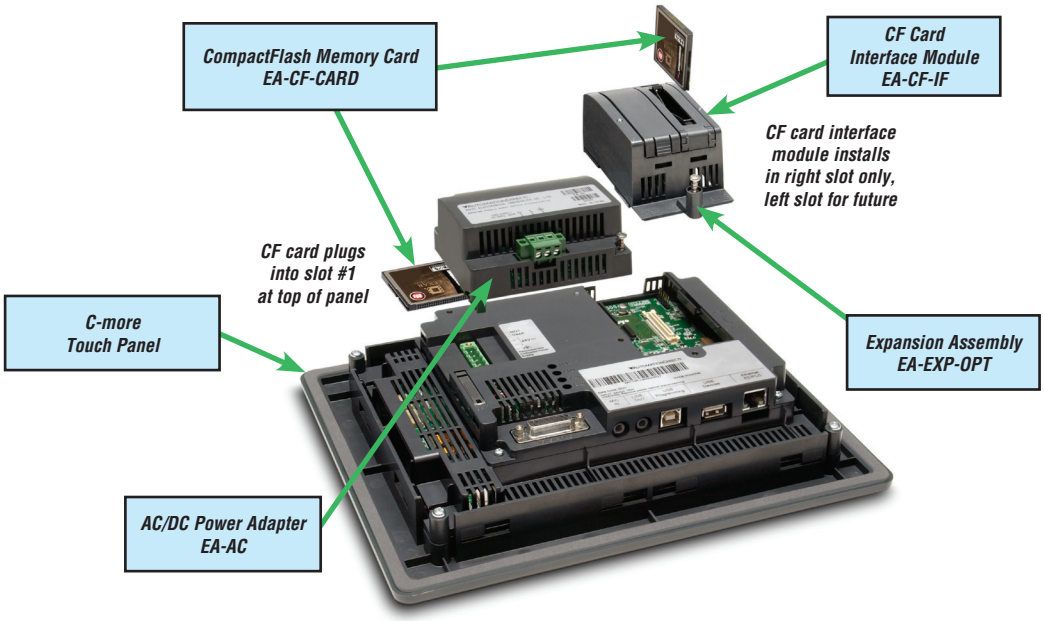

***NOTE**: Refer to the individual product data sheets that are included with the accessories for additional information.*

Accessories at a glance:

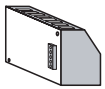

AC/DC Power Adapter:
EA-AC

Expansion Assembly:
EA-EXP-OPT

CF Card Interface Module:
EA-CF-IF

CompactFlash
Memory Card:
EA-CF-CARD

6 inch Adapter Plate:
EA-6-ADPTR
(Used to retrofit new ***C-more*** 6" touch panel into existing EZTouch non-slim panel cutout.)

D-SUB 15 pin 90 degree
Comm Port Adapter:
EA-ADPTR-4

D-SUB 15 pin to
Terminal Block Adapter:
EA-COMCON-3

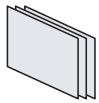

Non glare 15 inch screen cover:
EA-15-COV2
(pk of 3)

Non glare 12 inch screen cover:
EA-12-COV2
(pk of 3)

Non glare 10 inch screen cover:
EA-10-COV2
(pk of 3)

Non glare 8 inch screen cover:
EA-8-COV2
(pk of 3)

Non glare 6 inch screen cover:
EA-6-COV2
(pk of 3)

WARNING

To minimize the risk of potential safety problems, you should follow all applicable local and national codes that regulate the installation and operation of your equipment. These codes vary from area to area and it is your responsibility to determine which codes should be followed, and to verify that the equipment, installation, and operation are in compliance with the latest revision of these codes.

Equipment damage or serious injury to personnel can result from the failure to follow all applicable codes and standards. We do not guarantee the products described in this publication are suitable for your particular application, nor do we assume any responsibility for your product design, installation, or operation.

If you have any questions concerning the installation or operation of this equipment, or if you need additional information, please call us at 770-844-4200.

This publication is based on information that was available at the time it was printed. At ***Automationdirect.com***® we constantly strive to improve our products and services, so we reserve the right to make changes to the products and/or publications at any time without notice and without obligation. This publication may also discuss features that may not be available in certain revisions of the product.

AC/DC Power Adapter

The optional *C-more* AC/DC Power Adapter can be used to power the *C-more* touch panels from a 100-240 VAC, 50/60 Hertz, voltage source. The adapter provides 24 VDC @ 1.5 A to the touch panel's DC power connector and can be conveniently secured to the touch panel with two captive screws. The adapter provides a power loss signal to the touch panel that can be used to track power outages. This signal also allows the touch panel by way of a timed sequence to stop writing data to CompactFlash memory devices providing a controlled shutdown for increased data logging reliability.

WARNING: The AC/DC Power Adapter is not recommended for use with the EA7-T15C touch panel when operating temperatures are expected to exceed 40 °C [104 °F].

NOTE: *1.)The AC/DC Power Adapter, EA-AC, is for* ***C-more*** *touch panels only, and is powered from a 100-240 VAC, 50/60 Hertz power source. The adapter provides 24 VDC @ 1.5 A.*
2.) Power Fault features help protect data being logged to CompactFlash during power failures. The ***C-more*** *panel must have firmware version 1.21 Build 6.18E or higher for proper operation.*

Part No. EA-AC

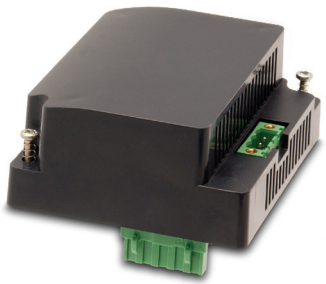

AC/DC Power Adapter Wiring

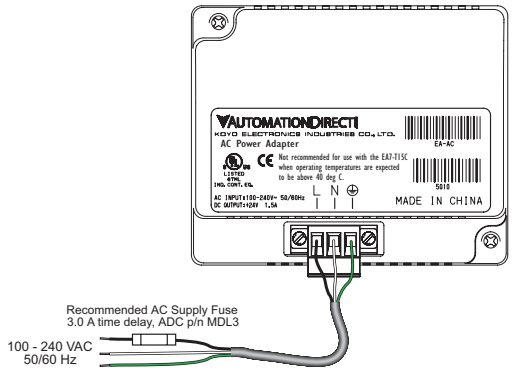

Tightening Torque	
Power supply cable torque	71 - 85 oz-in (0.5 - 0.6 Nm)
Power connector mounting torque	71 - 85 oz-in (0.5 - 0.6 Nm)
Mounting flange screw torque	57 - 71 oz-in (0.4 - 0.5 Nm)

NOTE: Use 60 / 75 °C copper conductors only.

AC/DC Power Adapter Specifications

AC/DC Power Adapter Specifications	
Part Number	**EA-AC**
Input Voltage & frequency	100-240 VAC; 50/60 Hertz
Voltage Range	85-264 VAC w/ Under Voltage and Over Voltage Shutdown
Permissible Momentary Power Failure	Within 40 ms, see explanation in the Note below.
Input Power	68 VA or less
Operating Temperature Range	0 °C to 50 °C [32 to 122 °F] Maximum surrounding temperature rating, 50 °C (For the EA7-T15C touch panel, maximum temperature is 40° C, [104 °F] when using the AC/DC Power Adapter.)
Storage Temperature Range	-20 to 60 °C [-4 to 140 °F]
Operating & Storage Humidity	10-85% RH (non-condensing)
Noise Immunity	1000 VAC p-p (Pulse width 1 µs, rise time: 1 ns) With proper ground connection on AC terminal block.
Hi-pot	1000 VAC, 1 minute With proper ground connection on AC terminal block.
Insulation Resistance	500 VDC, 10 M ohm or above With proper ground connection on AC terminal block.
Vibration	Compliant with IEC61131-2
Shock	Pulse shape: Sine half wave, Peak acceleration: 147 m/s2 (15 G), X, Y, Z: 3 directions, 2 times each
Thermal Protection	140 °C [284 °F], with autorecovery
Short Circuit Protection	85 VAC: 2.6 A, 100 VAC: 2.8 A, 264 VAC: 3.9 A
Static Electricity Discharge Resistance	Compliant with IEC61000-4-2, Contact: 4 kV, Air: 8 kV
Agency Approvals	UL508, cUL, CE, EMC EN61132-2
Environment	For use in pollution degree 2 environment
Grounding	Ground resistance: less than 100 ohm
Diemnsions - inches [mm]	3.00" (H) x 3.66" (W) x 1.42" (D) [76.2 mm x 93.0 mm x 36.1 mm] (Excluding DC Power Connector.)
Weight	6.13 oz. [175 g]
Cooling Method	Natural convection when installed on vertically mounted touch panel.
Included Parts	AC Power Connector, Data Sheet Insert
Removable AC Power Connector	EA-AC-CON or DECA Switchlab MC101-508-03G Secure with (2) captive M2.5 screws, torque to 70 oz-in [0.5 Nm]
Output Voltage and Ripple	21.6 - 26.4 VDC, Ripple < 100 mV p-p
Output Current	Maximum 1.5 A
Inrush Current	For 100 VAC: 15 A, 3 ms or less For 240 VAC: 20 A, 3 ms or less
Power Fail Detection Voltage	58 VAC ±5%
Recommended AC Supply Fuse	3.0 A time delay, ADC p/n MDL3
Power Supply Cable Torque	71 - 85 oz-in (0.5 - 0.6 Nm)
Mounting to Touch Panel	Secure with (2) spring loaded captive M3-20 screws, torque to 50 oz-in [0.35 Nm]

***NOTE**: Permissible momentary power failure: The **C-more** touch panel will turn off the LCD backlight instantly when the power failure is detected (less than 58 VAC +/- 5%) for extending the Power Retention Period that enables the CPU to run longer. The backlight turns on automatically when the power returns to the **C-more** operating voltage.*

AC/DC Power Adapter Dimensions

Dimensions

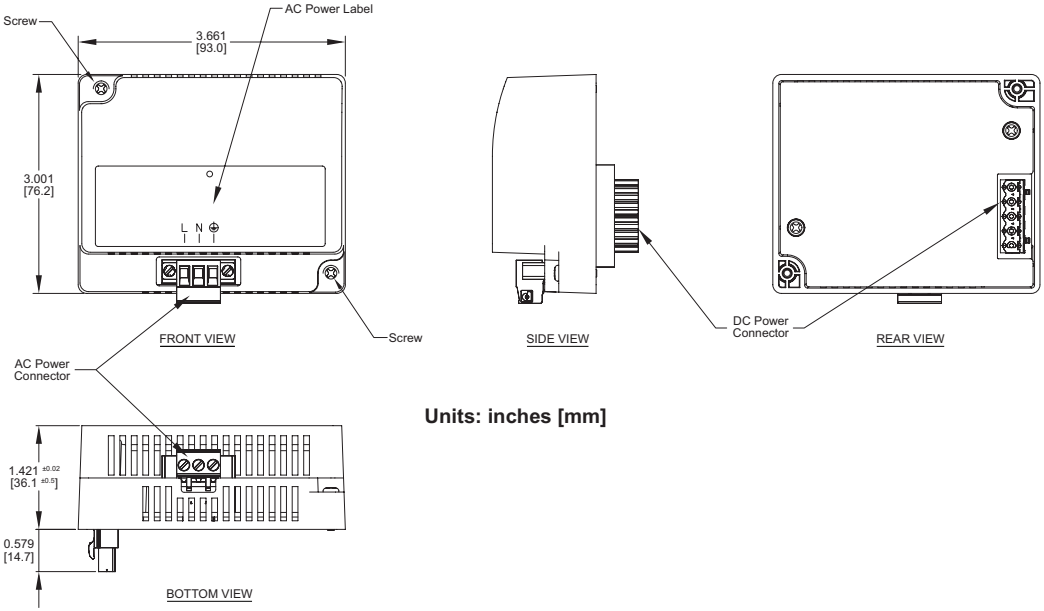

Units: inches [mm]

Panel Depth with AC/DC Power Adapter Installed

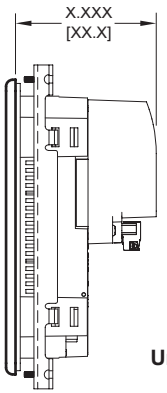

EA7-S6M-R = 2.921 [74.2]
EA7-T6CL-R = 2.921 [74.2]
EA7-S6C-R = 2.921 [74.2]
EA7-S6M = 2.921 [74.2]
EA7-S6C = 2.921 [74.2]
EA7-T6C = 2.921 [74.2]
EA7-T6CL = 2.921 [74.2]
EA7-T8C = 3.157 [80.2]
EA7-T10C = 3.106 [78.9]
EA7-T12C = 3.102 [78.8]
EA7-T15C = 3.075 [78.1]

Units: inches[mm]

AC/DC Power Adapter Installation

WARNING: This procedure should only be performed by qualified personnel who are experienced in working with electronic equipment. Take the necessary steps to prevent damage that may be caused by static electricity discharge. Disconnect input power to the touch panel before proceeding.

Preparation: Place the touch panel face down on a lint-free soft surface to prevent scratching the display screen if not already installed in a control cabinet. Remove the DC power connector if it is installed.

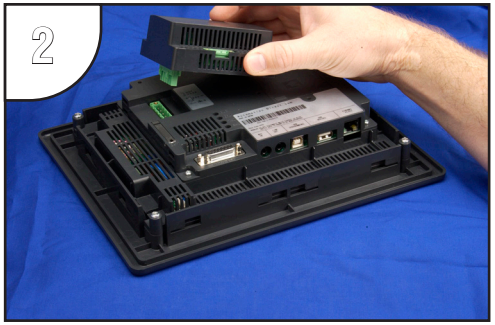

Insert the AC/DC Power Adapter into the touch panel's 5-position DC power connector.

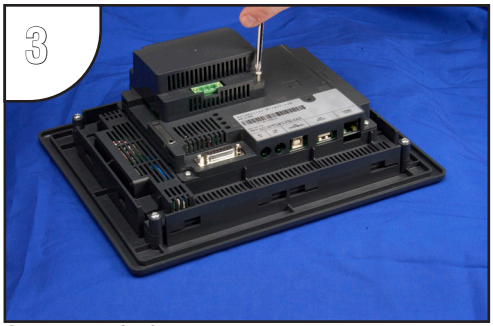

Secure the AC/DC Power Adapter to the touch panel by tightening the two (2) spring loaded captive M3-20 screws to a torque of 50 oz-in [0.35 Nm].

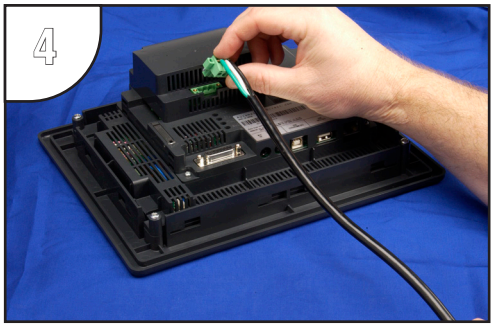

Plug the wired 3-pin AC Power Connector into its mating connector on the adapter and secure in place by tightening the two (2) captive M2.5 screws to a torque of 70 oz-in [0.5 Nm]. (Wiring details shown on page 3-5.)

Expansion Assembly

The *C-more* Expansion Assembly is used to allow installation of the optional CF Card Interface Module for CF card use and also provides a slot for future option modules.

Part No. EA-EXP-OPT

Expansion Assembly Dimensions

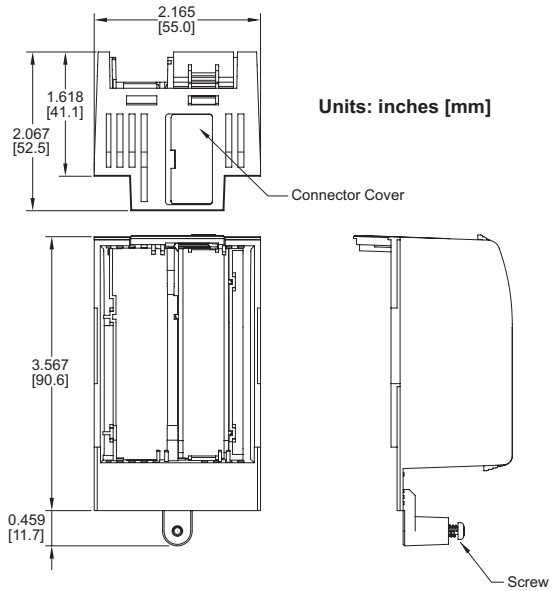

Panel Depth with Expansion Assembly Installed

EA7-S6M = 2.921 [74.2]
EA7-S6C = 2.921 [74.2]
EA7-T6C = 2.921 [74.2]
EA7-T6CL = 2.921 [74.2]
EA7-T8C = 3.157 [80.2]
EA7-T10C = 3.106 [78.9]
EA7-T12C = 3.102 [78.8]
EA7-T15C = 3.075 [78.1]

Units: inches[mm]

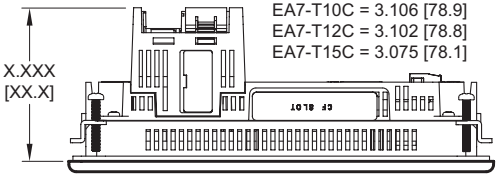

Expansion Assembly Details

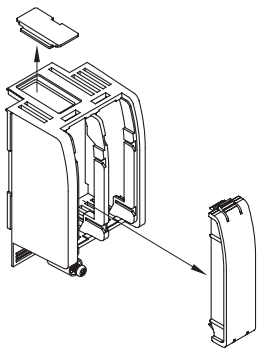

Expansion Assembly Installation

WARNING: This procedure should only be performed by qualified personnel who are experienced in working with electronic equipment. Disconnect input power to the touch panel before proceeding.

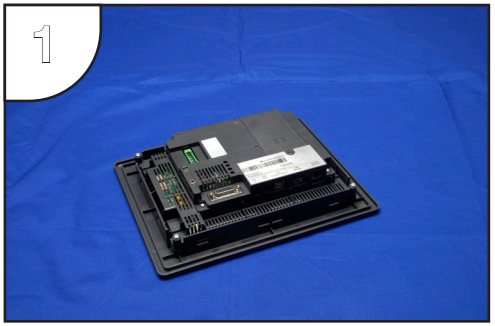

Preparation: Place the touch panel face down on a lint-free soft surface to prevent scratching the display screen if not already installed in a control cabinet.

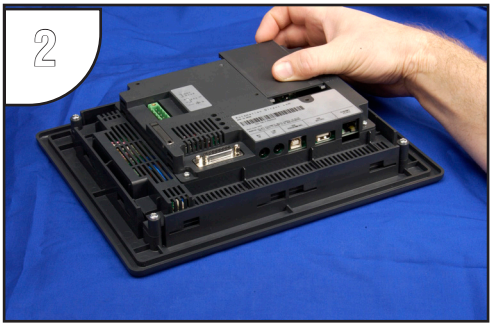

Remove expansion area cover by pressing down on the left and right line markings and at the same time, slide the cover in the direction of the embossed arrow.

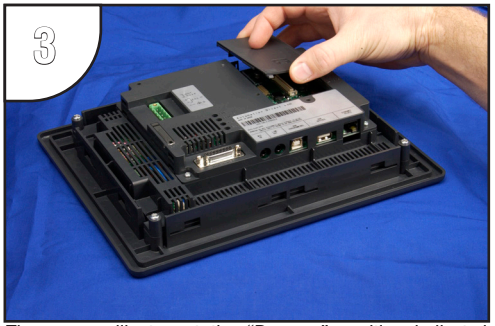

The cover will stop at the "Remove" position indicated by a tic mark on the cover lining up with the "Remove" tic mark on the panel. At this position, lift the cover up.

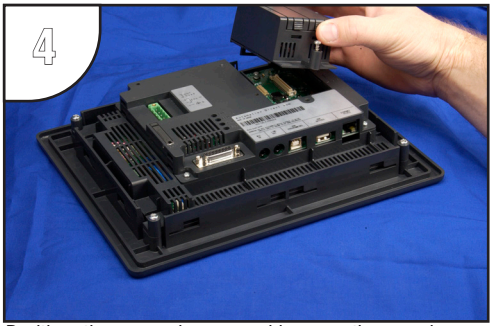

Position the expansion assembly over the opening so that the tic mark to the right of the fastening screw lines up with the "Remove" tic mark.

Expansion Assembly Installation (cont'd)

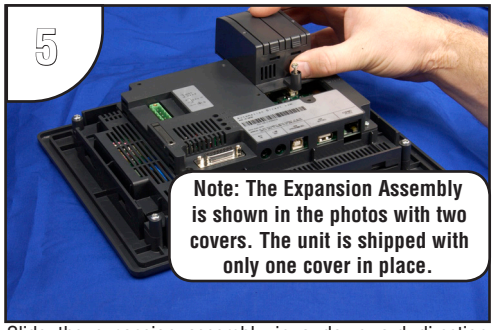

Slide the expansion assembly in a downward direction until the tic marks at the home position line up.

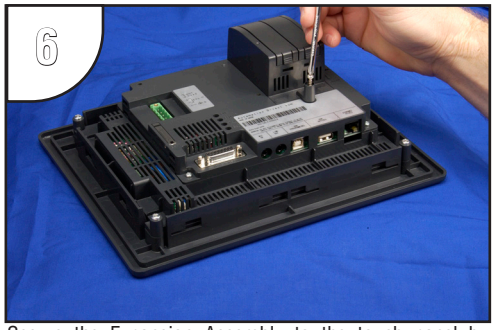

Secure the Expansion Assembly to the touch panel by tightening the spring loaded captive M3-20 screw to a torque of 50 oz-in [0.35 Nm].

CF Card Interface Module

The *C-more* CF Card Interface Module is used with the Expansion Assembly to allow use of CompactFlash™ cards, such as the CompactFlash Memory, EA-CF-CARD.

Part No. EA-CF-IF

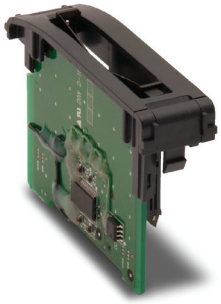

CF Card Interface Module Dimensions

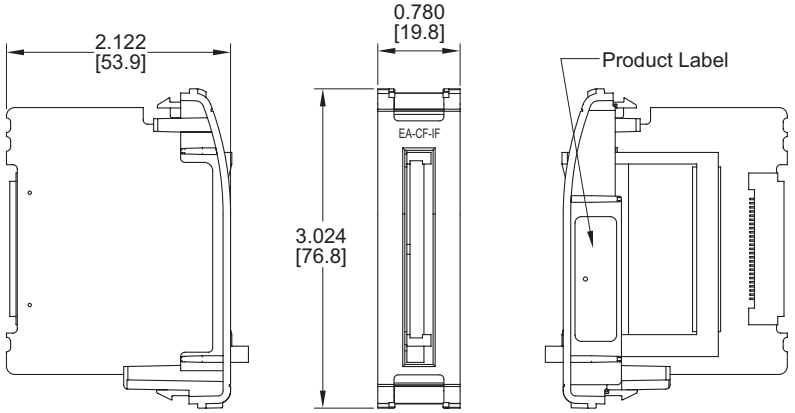

Units: inches [mm]

CF Card Interface Module Installation

WARNING: The CF Card Interface Module is designed to be installed in the right hand side slot of the Expansion Assembly only. This procedure should only be performed by qualified personnel who are experienced in working with electronic equipment. Take the necessary steps to prevent damage that may be caused by static electricity discharge. Disconnect input power to the touch panel before proceeding.

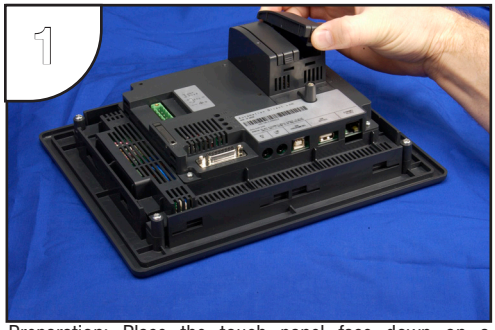

Preparation: Place the touch panel face down on a lint-free soft surface to prevent scratching the display screen if not already installed in a control cabinet. Again, make sure the input power is disconnected. Remove the right hand side protective slot cover, if it is installed, by squeezing the pinch tabs and lifting the cover off.

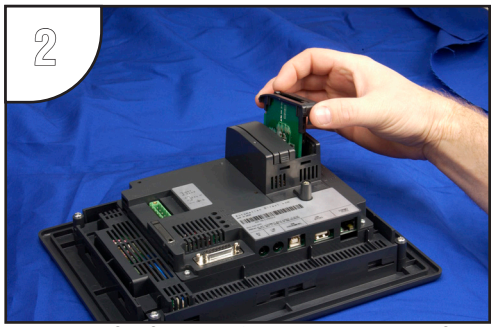

Install the CF Card Interface Module, p/n EA-CF-IF, into the right hand side slot by carefully aligning the female connector of the interface module with the male connector on the touch panel. There are PCB guides at the top and bottom of the slot to accept the edge of the Interface Module's printed circuit board. It is also helpful to preset the locking tabs of the Interface Module so they are swung inward, top and bottom.

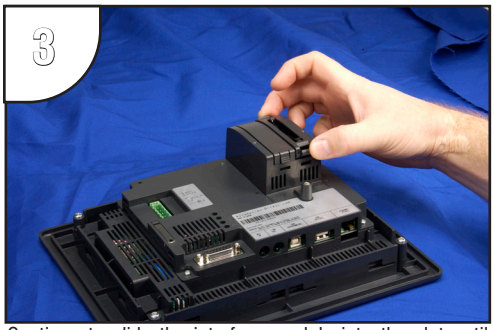

Continue to slide the interface module into the slot until the front of the module is flush with the front of the Expansion Assembly. Press on the front of the Interface Module until the locking tabs snap into place.

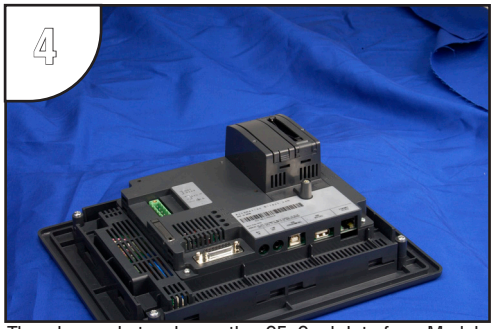

The above photo shows the CF Card Interface Module fully installed. To remove the Interface Module in the future, pry out on the top and bottom locking tabs at the same time and the module will release from the connector. Lift the module from the slot. The Interface Module should only be removed from the slot with input power disconnected.

CompactFlash Memory

EA-CF-CARD is a high speed industrial grade CompactFlash™ memory card for non-volatile storage. Its 85 °C operating temperature makes it perfect for data logging in industrial applications (recommended for ***C-more*** touch panels).

Part No. EA-CF-CARD

Specifications/Features:

- CompactFlash™ Compatibility
- W/E Endurance: 100,000 cycles
- Data transfer rate: 16MB/second
- Operating Temp: -13° to 185° F (-25° to 85° C)
- Operating Humity: 85% max, non-condensing
- Storage Temp: -13° to 194° F (-25° to 90° C)
- Storage Humity: 95% max, non-condensing

CF Slot #1 Location

CF Slot #2 Location

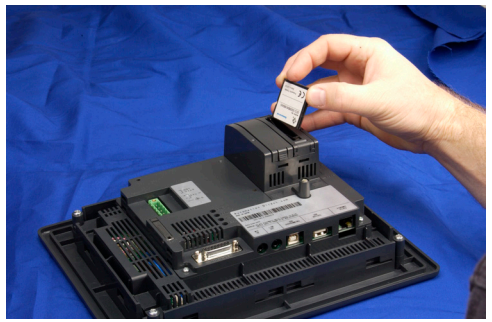

CompactFlash Memory Card Installation

WARNING: Take the necessary steps to prevent damage that may be caused by static electricity discharge. Disconnect input power to the touch panel before proceeding.

CF Card Installed in CF Slot #1:

Preparation: If the touch panel is not already installed into a control cabinet, then in a clean environment, place the panel face down on a lint-free soft surface to prevent scratching the front of the panel.

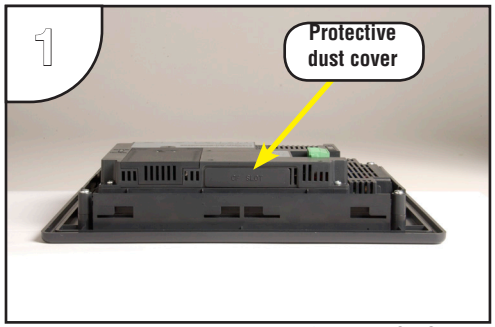

Remove the protective dust cover from the CF Slot #1 at the top of the touch panel by prying up on one edge. Discard the dust cover or store it for future use when a CF card is not being used.

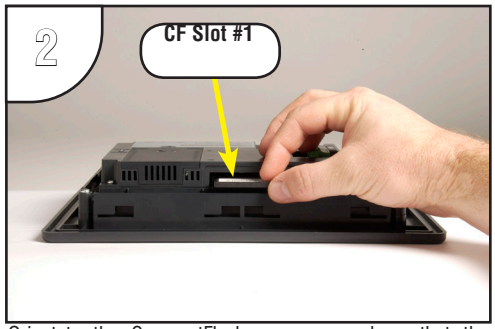

Orientate the CompactFlash memory card so that the front label is facing the back of the panel and the CF card connector faces into the slot. There are guides on each side of the slot that will match the guides on the CF card. The CF card can only be inserted one way.

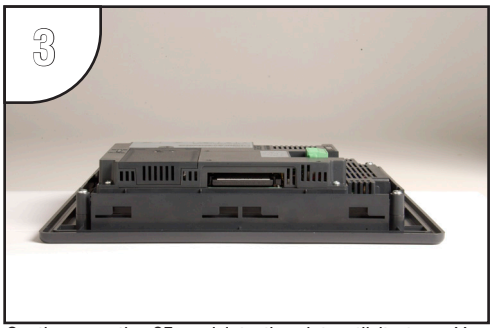

Gently press the CF card into the slot until it stops. You should feel a slight resistance as the CF card connector mates with the slot's connector. The CF card should be flush with the slot's opening. The dust cover can then be re-installed.

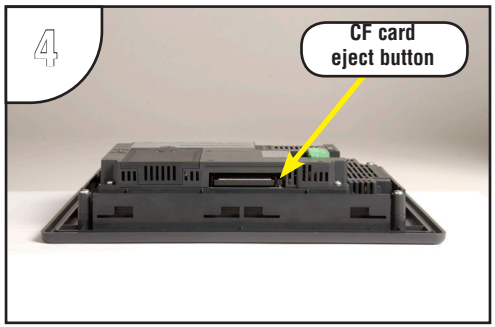

To remove the CF card from the CF Slot #1, press in on the eject button to the right of the CF card. This will cause the CF card to be partially ejected from the slot allowing removal.

WARNING: Do NOT use EZTouch RAM or Flash memory cards with the *C-more* touch panels.

CompactFlash Memory Card Installation (cont'd)

CF Card Installed in CF Slot #2:

Preparation: Disconnect input power and all other connections, then remove the touch panel from the control cabinet. In a clean environment, place the panel face down on a lint-free soft surface to prevent scratching the front of the panel.

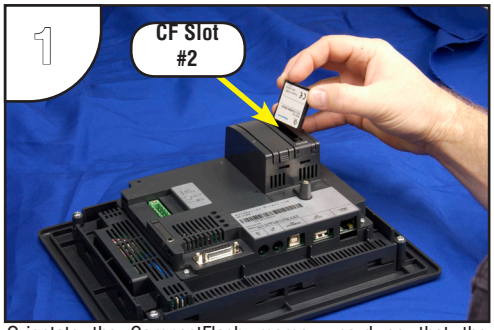

Orientate the CompactFlash memory card so that the front label is facing the power supply connector and the CF card connector faces into the slot. There are guides on each side of the slot that will match the guides on the CF card. The CF card can only be inserted one way.

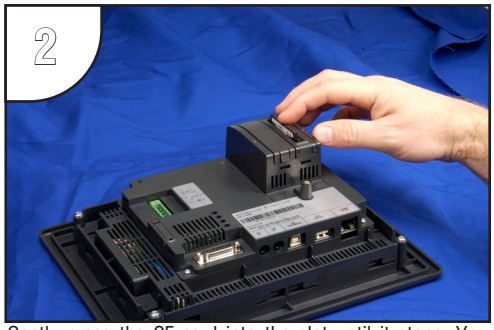

Gently press the CF card into the slot until it stops. You should feel a slight resistance as the CF card connector mates with the slot's connector. The CF card should be flush with the slot's opening.

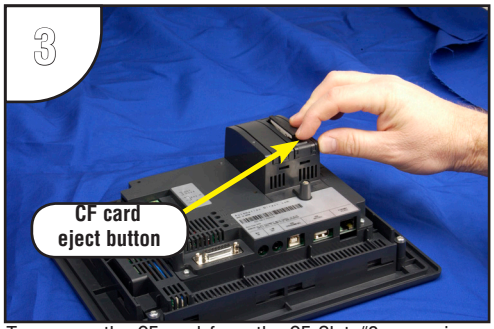

To remove the CF card from the CF Slot #2, press in on the eject button at the bottom of the CF card. This will cause the CF card to be partially ejected from the slot allowing removal.

WARNING: Do NOT use EZTouch RAM or Flash memory cards with the *C-more* touch panels.

6” Adapter Plate

The adapter plate has been designed to simplify the retrofit of a new *C-more* 6” touch panel into an existing cabinet cutout for an **EZTouch** 6” non-slim touch panel, such as *AutomationDirect* part number EZ-S6C-K, EZ-S6C-F, EZ-S6M-R or EZ-S6M-F. The new *C-more* 6” touch panel will directly mount into the existing cutout opening for any **EZTouch** 6” slim touch panel.

Part No. EA-6-ADPTR

6” Adapter Plate Cutout Dimensions

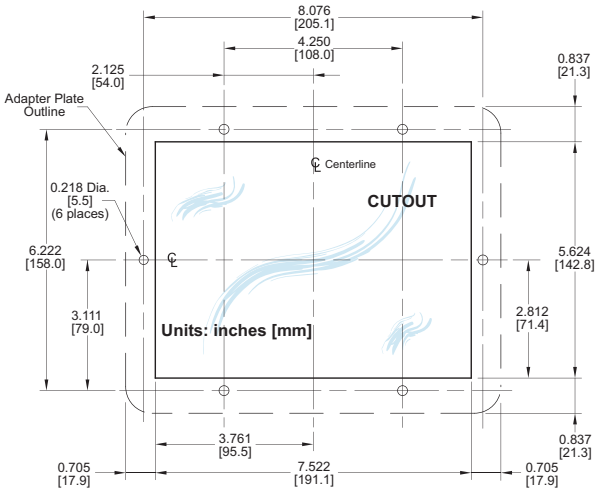

6” Adapter Plate Dimensions

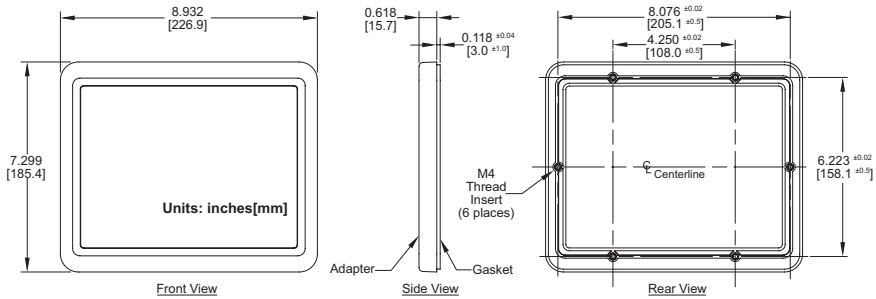

6" Adapter Plate Installation

The adapter plate has been designed to simplify the retrofit of a new ***C-more*** 6" touch panel into an existing cabinet cutout for an **EZTouch** 6" non-slim touch panel, such as our part number EZ-S6C-K, EZ-S6C-F, EZ-S6M-R or EZ-S6M-F. The new ***C-more*** 6" touch panel will directly mount into the existing cutout opening for any **EZTouch** 6" slim touch panel.

Two sets of mounting screws are provided with the adapter plate. Set A contains six M4 metric screws by 8mm in length for a control cabinet thickness range of 0.02-0.118" [0.5-3mm]. Set B contains six M4 metric screws by 10mm in length for a control cabinet thickness range of 0.118-0.197" [3-5mm]. Mounting screw torque: 100 oz-in [0.7 Nm].

The two DIN mounting clips that secure the ***C-more*** 6" touch panel to the adapter plate are provided with the touch panel. The adapter plate has an integral sealing gasket and the touch panel includes a gasket to seal the panel to the adapter.

Use of the adapter plate will maintain the NEMA 4/4X (indoor) rating of the ***C-more*** touch panel.

Dimensions for the cutout with mounting hole locations and an assembly diagram are shown in this chapter.

Preparation: Confirm the existing cutout with the dimensions shown on the previous page when using the adapter plate to replace an existing **EZTouch** 6" non-slim touch panel with a new ***C-more*** 6" touch panel.

WARNING: Mount the adapter plate and touch panel on a vertical surface to allow proper cooling.

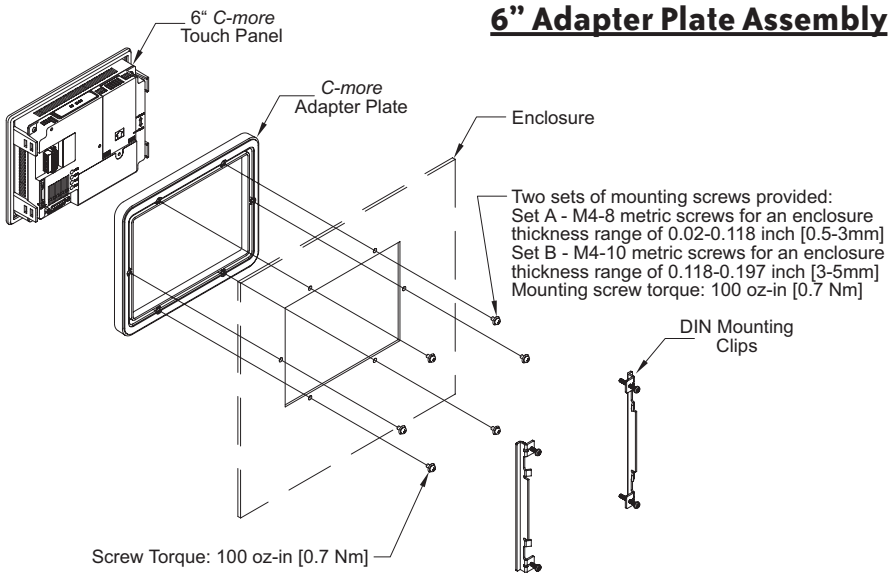

6" Adapter Plate Assembly

D-SUB 15-pin 90 degree Comm Port Adapter

The EA-ADPTR-4 adapter is plugged into the 15-pin serial port on the rear of the panel to allow a PLC communication cable to be plugged in at a 90 degree angle to reduce panel depth requirements. UL Recognized.

Part No. EA-ADPTR-4

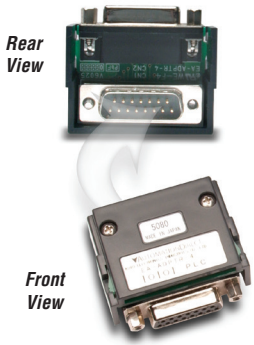

Panel Dimensions with Connector Installed

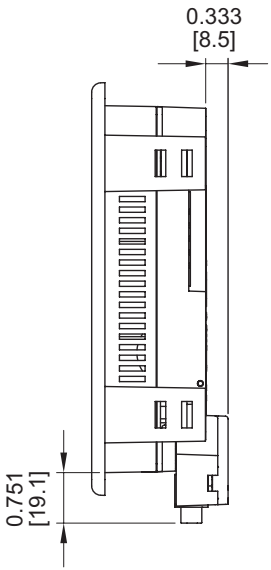

Comm Port Adapter Dimensions

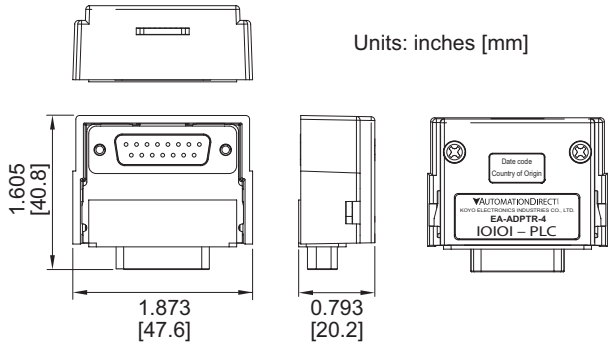

Installation

D-SUB 15-pin to Terminal Block Adapter

The EA-COMCON-3 adapter is plugged into the 15-pin serial port on the rear of the panel to allow wire terminal connections for RS-422/485 PLC communication cable. UL Recognized.

Part No. EA-COMCON-3

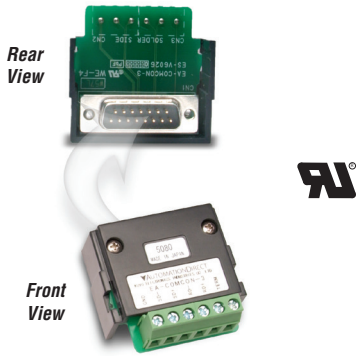

Panel Dimensions with Connector Installed

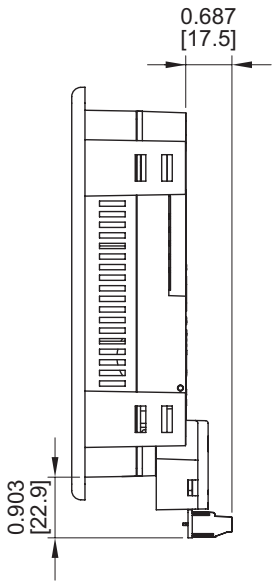

Terminal Block Adapter Dimensions

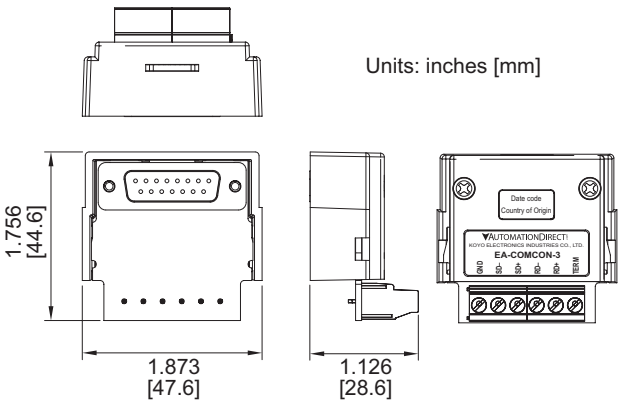

Installation

D-SUB 15-pin to Terminal Block Adapter (cont'd)

Terminal Block Adapter Wiring Diagram

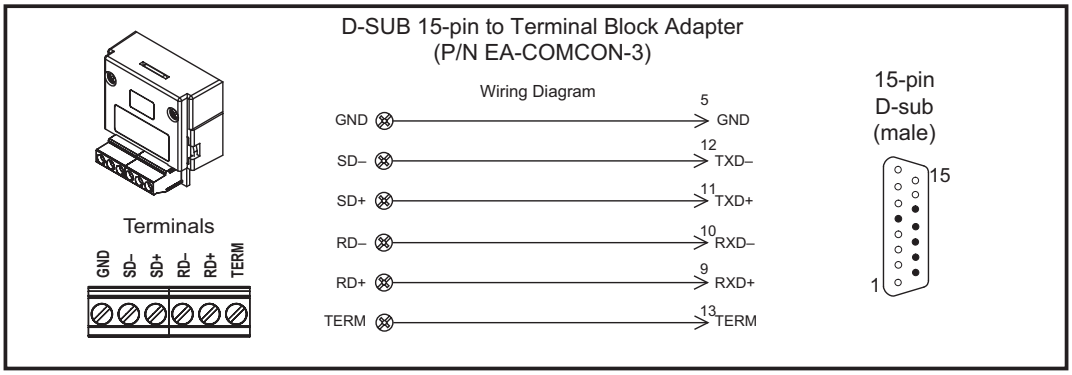

Non-glare Screen Covers

Non Glare 6 Inch Screen Cover, protective overlay used to protect the touch screen while helping to reduce the glare from external light sources. (pk of 3)

Part No. EA-6-COV2, EA-8-COV2, EA-10-COV2, EA-12-COV2 & EA-15-COV2

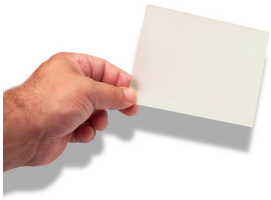

Screen Cover Dimensions

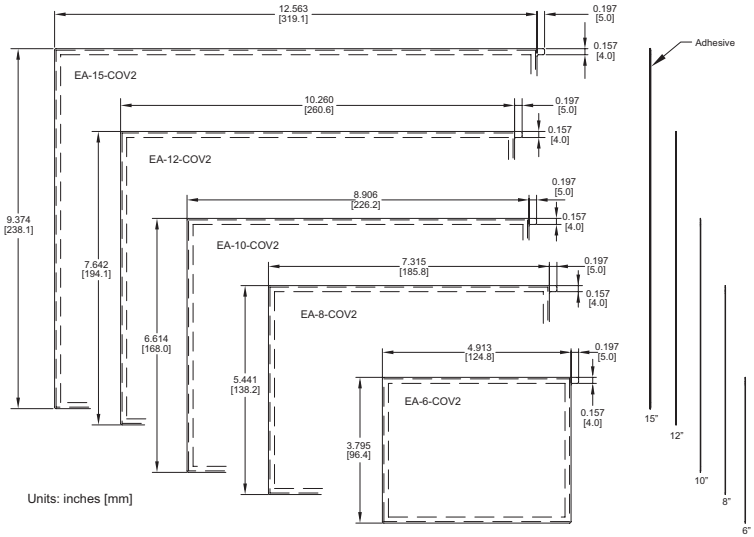

Non-glare Screen Covers (cont'd)

Clear Screen Overlay Installation

Step 1

Check to be sure that the proper size non-glare screen cover is being used on the subject touch panel. Notice that the outer perimeter of the screen cover has an adhesive band. The adhesive band will be located on the outside edge of the touch panel's white frame bordering the touch area when installed.

Step 2

Start in one corner and peel the screen cover from the backing.

Step 3

Align the screen cover over the touch panel's white frame, then start on one side and gently lay the cover over the entire touch area.

Step 4

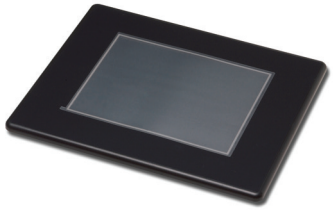

Smooth out the screen cover and press all around the outside perimeter to secure the cover in place. The screen cover can be removed by lifting up on the small tab and gently pulling the cover away form the touch panel's surface.

Step 5

Remove the protective sheet.

***NOTE**: The protective cover ships with a thin protective sheet on the face of the cover that needs to be carefully removed. If your panel is not clear, the protective sheet may not have been removed.*

Installation & Wiring

In This Chapter...

Safety Guidelines **4–2**
Introduction **4–3**
EA7-S6M-R, S6C-R, T6CL-R, S6M, S6C, T6C, T6CL – Cutout Dimensions **4–4**
EA7-T8C – Cutout Dimensions **4–5**
EA7-T10C – Cutout Dimensions **4–6**
EA7-T12C – Cutout Dimensions **4–7**
EA7-T15C – Cutout Dimensions **4–8**
6" Adapter Plate – EA-6-ADPTR **4–9**
Mounting Clearances **4–11**
Wiring Guidelines **4–12**
Agency Approvals 4–12
Marine Use 4–12
Providing Power to the Touch Panel 4–13
DC Wiring Diagram 4–13
AC Wiring Diagram (EA-AC) 4–14

Safety Guidelines

NOTE: Products with CE marks *perform their required functions safely and adhere to relevant standards as specified by CE directives provided they are used according to their intended purpose and that the instructions in this manual are adhered to. The protection provided by the equipment may be impaired if this equipment is used in a manner not specified in this manual. A listing of our international affiliates is available on our Web site: http://www.automationdirect.com*

WARNING: Providing a safe operating environment for personnel and equipment is your responsibility and should be your primary goal during system planning and installation. Automation systems can fail and may result in situations that can cause serious injury to personnel or damage to equipment. Do not rely on the automation system alone to provide a safe operating environment. You should use external electromechanical devices, such as relays or limit switches, that are independent of the PLC application to provide protection for any part of the system that may cause personal injury or damage. Every automation application is different, so there may be special requirements for your particular application. Make sure you follow all national, state, and local government requirements for the proper installation and use of your equipment.

Plan for Safety

The best way to provide a safe operating environment is to make personnel and equipment safety part of the planning process. You should examine *every* aspect of the system to determine which areas are critical to operator or machine safety. If you are not familiar with control system installation practices, or your company does not have established installation guidelines, you should obtain additional information from the following sources.

- NEMA — The National Electrical Manufacturers Association, located in Washington, D.C. publishes many different documents that discuss standards for industrial control systems. You can order these publications directly from NEMA. Some of these include:

  ICS 1, General Standards for Industrial Control and Systems

  ICS 3, Industrial Systems

  ICS 6, Enclosures for Industrial Control Systems

- NEC — The National Electrical Code provides regulations concerning the installation and use of various types of electrical equipment. Copies of the NEC Handbook can often be obtained from your local electrical equipment distributor or your local library.
- Local and State Agencies — many local governments and state governments have additional requirements above and beyond those described in the NEC Handbook. Check with your local Electrical Inspector or Fire Marshall office for information.

Introduction

The installation and wiring of the *C-more*® touch panels requires selecting an appropriate location for the touch panel, laying out the cutout dimensions on the surface of the control cabinet that the panel will be mounted through, securing the touch panel with the provided mounting clips, tightening the screws to the appropriate torque rating to assure the gasket is sealing correctly, and finally connecting the appropriate power source to the touch panel.

WARNING: *C-more* touch panels need to be mounted on a vertical surface to ensure proper cooling of the panel and its components.

***Note**: Each **C-more** touch panel is provided with a cutout template to make marking the proper cutout size on the surface of the control cabinet that the panel will be mounted through a simple task.*

The *C-more* 6" touch panels include two mounting clips. The clips can be viewed as a long metal bracket with two screws in each clip. The 6" panel clips can be fitted to the touch panel at two different depth locations that allow the 6" panel to be mounted through a wide range of enclosure thicknesses. The 8" through 12" touch panels include six mounting clips while the 15" touch panel includes eight. The 8" through 15" panel mounting clips are all the same. They are fitted to the touch panel by inserting two tabs into mating wide slots around th panel and then sliding the clip into a narrower slot to secure it in place. There is one screw on each clip that needs tightening to secure the panel in place.

Any *C-more* touch panel can be mounted directly through the existing cutout of a same size **EZTouch** slim touch panel. There is a simple solution for the need to replace an EZTouch 6" non-slim (rounded bezel) touch panel as explained in the following note.

***NOTE**: The **C-more** 6" touch panels will fit into the existing cutout of any **EZTouch** 6" slim bezel panel. Use the **C-more** 6" Adapter Plate, EA-6-ADPTR, to install **C-more** 6" panels into existing cutouts of **EZTouch** 6" non-slim (rounded bezel) panels. The adapter plate gasket is included.*

This chapter only covers the proper mounting of the touch panel and connecting power. Once power is applied to the touch panel, the user will want to read Chapter 5 on the System Setup Screens in order to set the internal time and date for the panel, check the information menu to make sure the panel is the correct unit for the application and is the latest version, set communication port parameters that may be required, become familiar with the touch panel test features, and check memory options.

The next step will be to select the appropriate PLC protocol and communications cable as described in Chapter 6.

6" Mounting Clips

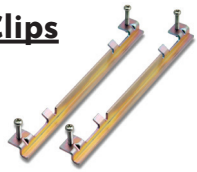

8-15" Mounting Clip

EA7-S6M-R, S6C-R, T6CL-R, S6M, S6C, T6C, T6CL – Cutout Dimensions

The *C-more* 6" touch panels are mounted into a cutout through the control cabinet and secured with two (2) mounting clips. The mounting clips are provided with the touch panel. There is a set of four (4) rectangular holes (slots) on each side of the touch panel's short dimension that the two tabs on each mounting clip will match. You will need to select either the upper or lower set of holes depending on your control cabinet's material thickness. The table below shows the different thickness ranges. The mounting clips are held in place, and pull the front bezel of the panel tight to the mounting surface, by tightening the screws into the rear of the control cabinet. The screws need to be tightened to the torque rating shown in the table below so that the gasket is compressed to form the proper seal between the panel and cabinet surface.

Note: *Mount the touch panel on a vertical surface to allow convection air flow for proper cooling.*

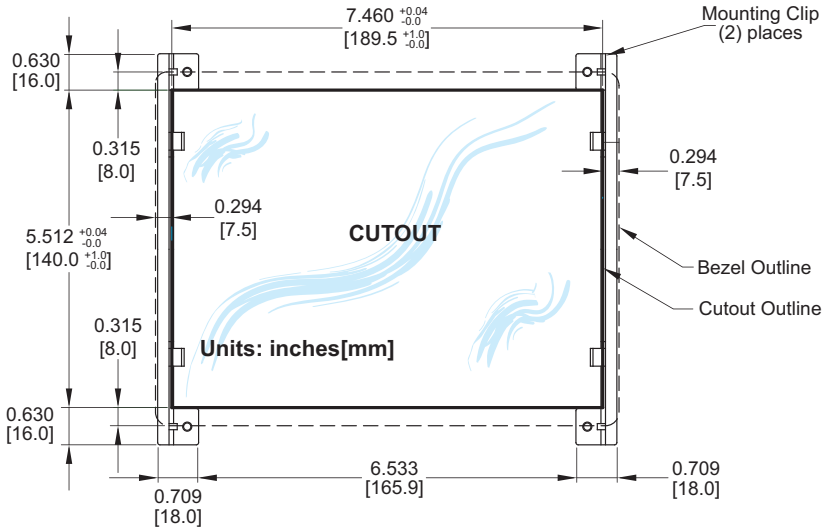

Enclosure Mounting Thickness Ranges and Mounting Clip Screw Torque

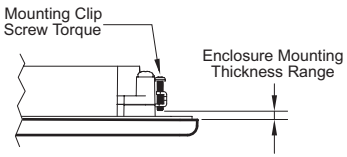

Touch Panel Size	Enclosure Thickness Range	Mounting Clip Screw Torque
6" – lower mounting clip position	0.039 - 0.24 inch [1 – 6 mm]	35 ~ 50 oz-in [0.25 ~ 0.35 Nm]
6" – upper mounting clip position	0.20 - 0.63 inch [5 – 16 mm]	35 ~ 50 oz-in [0.25 ~ 0.35 Nm]

EA7-T8C – Cutout Dimensions

The *C-more* 8" touch panels are mounted into a cutout through the control cabinet and secured with six (6) mounting clips. The mounting clips are provided with the touch panel. The mounting clips will insert into a series of slots around the rear perimeter of the touch panel. Each clip has two tabs that will mate to two slots, using the larger rectangular holes. The mounting clips are held in place by sliding the clip toward the smaller rectangular holes. The screw of each mounting clip needs to be tightened to the torque rating shown in the table below so that the gasket is compressed to form the proper seal between the panel and cabinet surface.

Note: *Mount the touch panel on a vertical surface to allow convection air flow for proper cooling.*

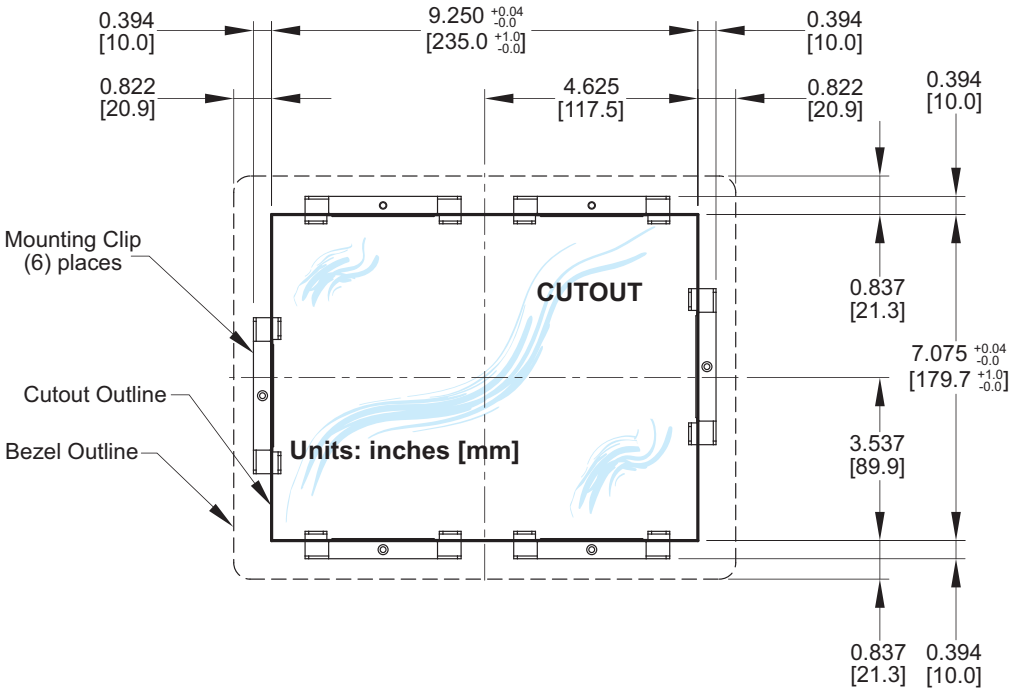

Enclosure Mounting Thickness Ranges and Mounting Clip Screw Torque

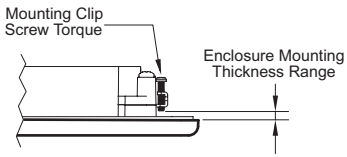

Touch Panel Size	Enclosure Thickness Range	Mounting Clip Screw Torque
8", 10", 12" & 15"	0.039 - 0.20 inch [1 – 5 mm]	42 ~ 57 oz-in [0.3 ~ 0.4 Nm]

EA7-T10C – Cutout Dimensions

The *C-more* 10" touch panels are mounted into a cutout through the control cabinet and secured with six (6) mounting clips. The mounting clips are provided with the touch panel. The mounting clips will insert into a series of slots around the rear perimeter of the touch panel. Each clip has two tabs that will mate to two slots, using the larger rectangular holes. The mounting clips are held in place by sliding the clip toward the smaller rectangular holes. The screw of each mounting clip needs to be tightened to the torque rating shown in the table below so that the gasket is compressed to form the proper seal between the panel and cabinet surface.

Note: *Mount the touch panel on a vertical surface to allow convection air flow for proper cooling.*

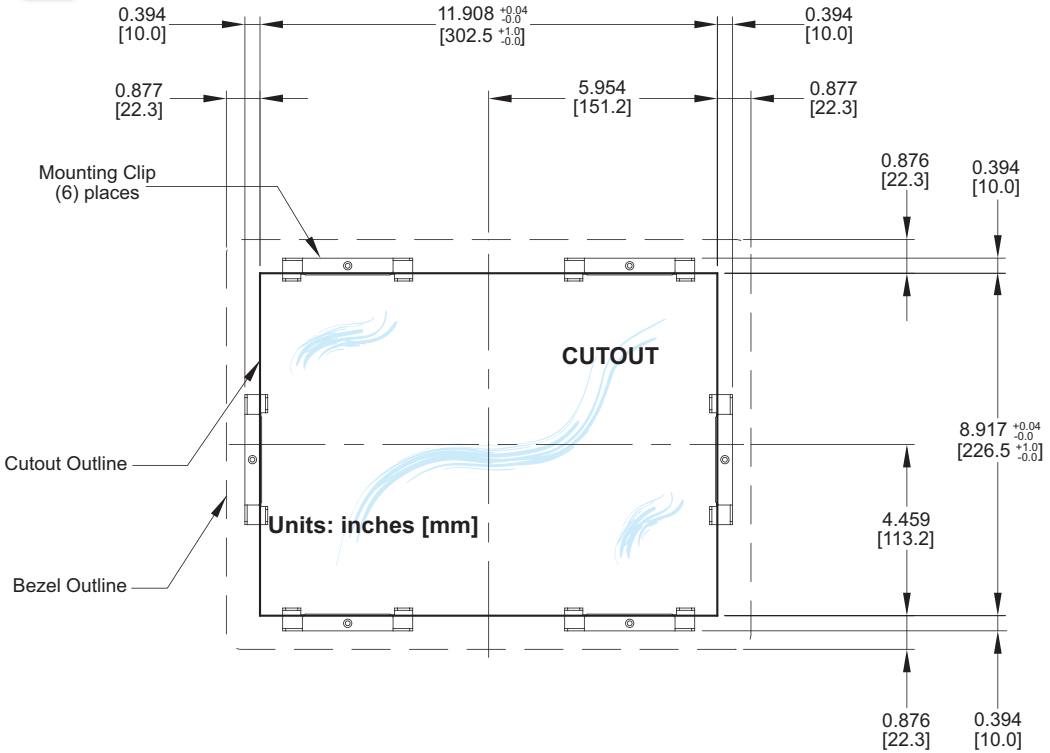

Enclosure Mounting Thickness Ranges and Mounting Clip Screw Torque

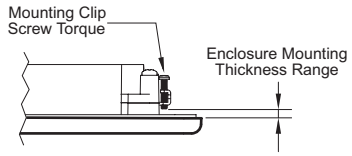

Touch Panel Size	Enclosure Thickness Range	Mounting Clip Screw Torque
8", 10", 12" & 15"	0.039 - 0.20 inch [1 – 5 mm]	42 ~ 57 oz-in [0.3 ~ 0.4 Nm]

EA7-T12C – Cutout Dimensions

The *C-more* 12" touch panels are mounted into a cutout through the control cabinet and secured with six (6) mounting clips. The mounting clips are provided with the touch panel. The mounting clips will insert into a series of slots around the rear perimeter of the touch panel. Each clip has two tabs that will mate to two slots, using the larger rectangular holes. The mounting clips are held in place by sliding the clip toward the smaller rectangular holes. The screw of each mounting clip needs to be tightened to the torque rating shown in the table below so that the gasket is compressed to form the proper seal between the panel and cabinet surface.

Note: *Mount the touch panel on a vertical surface to allow convection air flow for proper cooling.*

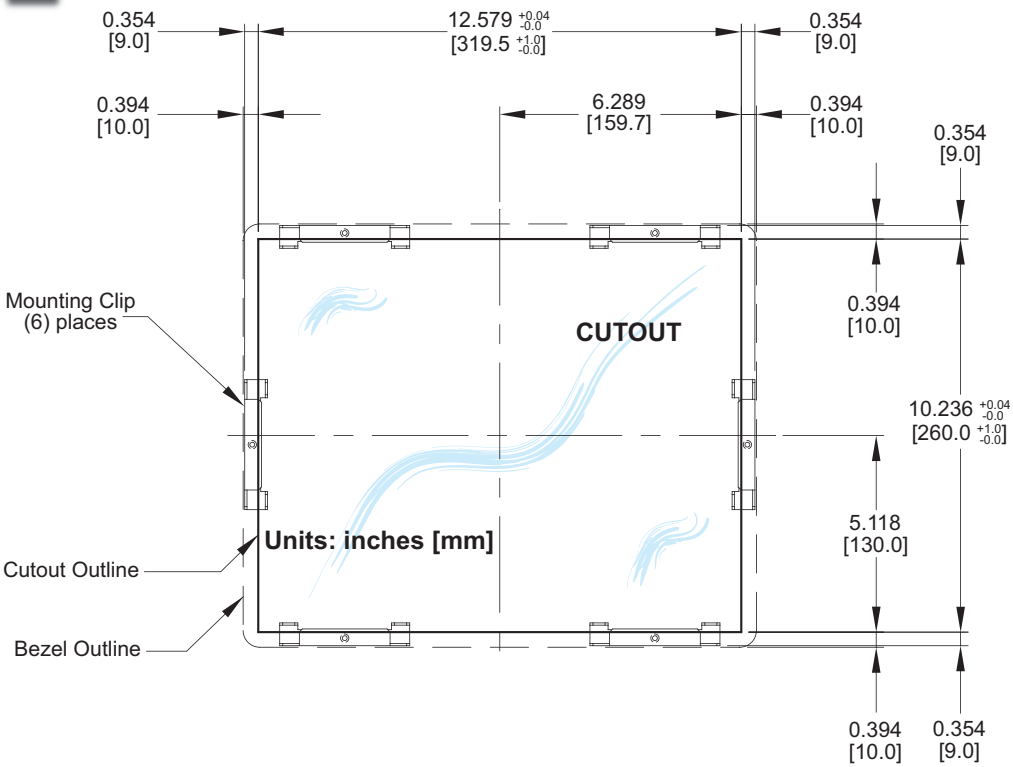

Enclosure Mounting Thickness Ranges and Mounting Clip Screw Torque

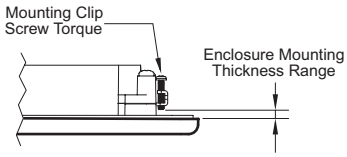

Touch Panel Size	Enclosure Thickness Range	Mounting Clip Screw Torque
8", 10", 12" & 15"	0.039 - 0.20 inch [1 – 5 mm]	42 ~ 57 oz-in [0.3 ~ 0.4 Nm]

EA7-T15C – Cutout Dimensions

The *C-more* 15" touch panels are mounted into a cutout through the control cabinet and secured with eight (8) mounting clips. The mounting clips are provided with the touch panel. The mounting clips will insert into a series of slots around the rear perimeter of the touch panel. Each clip has two tabs that will mate to two slots, using the larger rectangular holes. The mounting clips are held in place by sliding the clip toward the smaller rectangular holes. The screw of each mounting clip needs to be tightened to the torque rating shown in the table below so that the gasket is compressed to form the proper seal between the panel and cabinet surface.

Note: *Mount the touch panel on a vertical surface to allow convection air flow for proper cooling.*

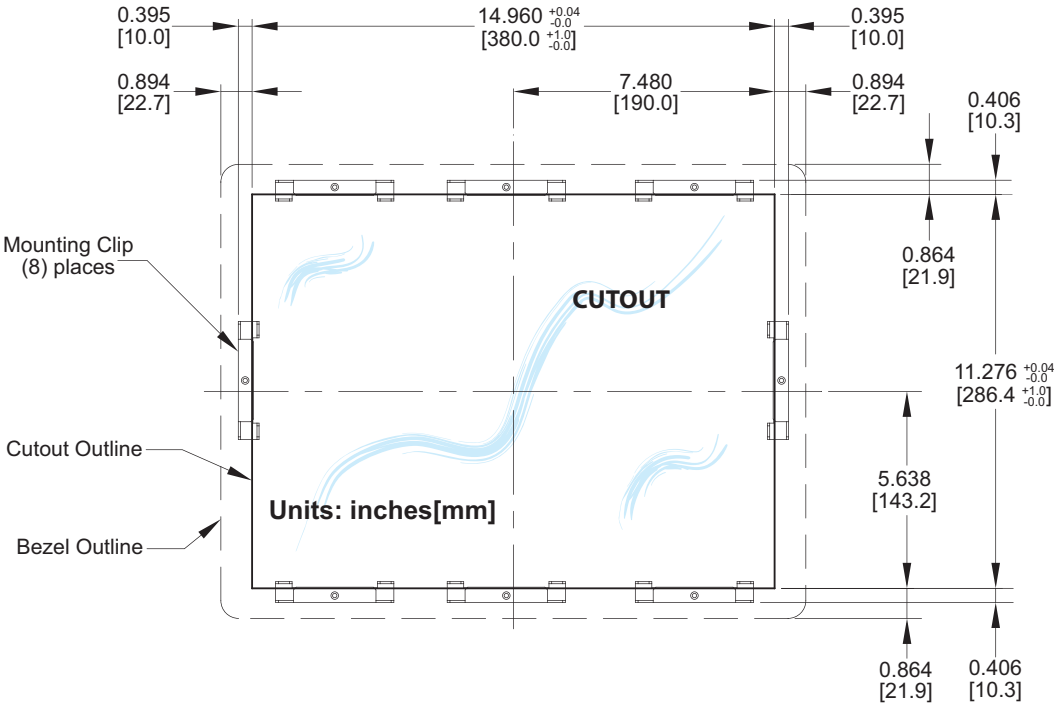

Enclosure Mounting Thickness Ranges and Mounting Clip Screw Torque

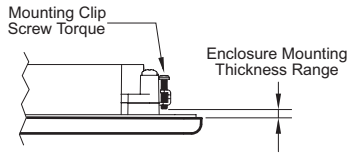

Touch Panel Size	Enclosure Thickness Range	Mounting Clip Screw Torque
8", 10", 12" & 15"	0.039 - 0.20 inch [1 – 5 mm]	42 ~ 57 oz-in [0.3 ~ 0.4 Nm]

6” Adapter Plate

Use the ***C-more*** 6” Adapter Plate, p/n EA-6-ADPTR, to install a ***C-more*** 6” touch panel into the existing cutout of an **EZTouch** 6” non-slim (rounded bezel) touch panel. Gasket and mounting hardware is included.

Part No. EA-6-ADPTR

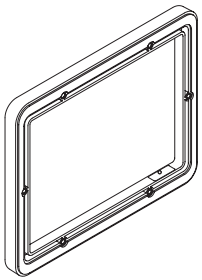

6” Adapter Plate Assembly

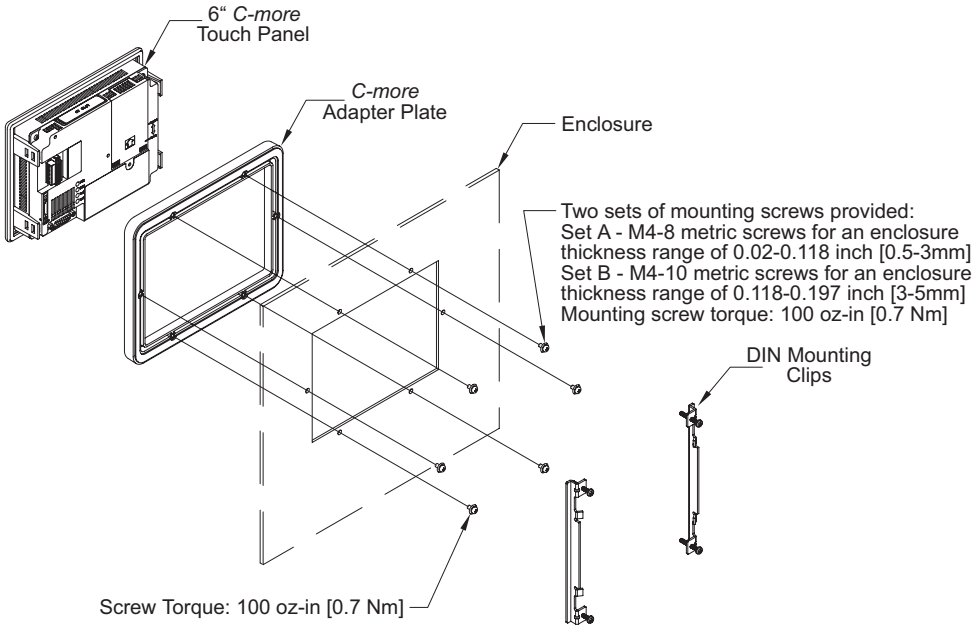

6” Adapter Plate (cont’d)

6” Adapter Plate Dimensions

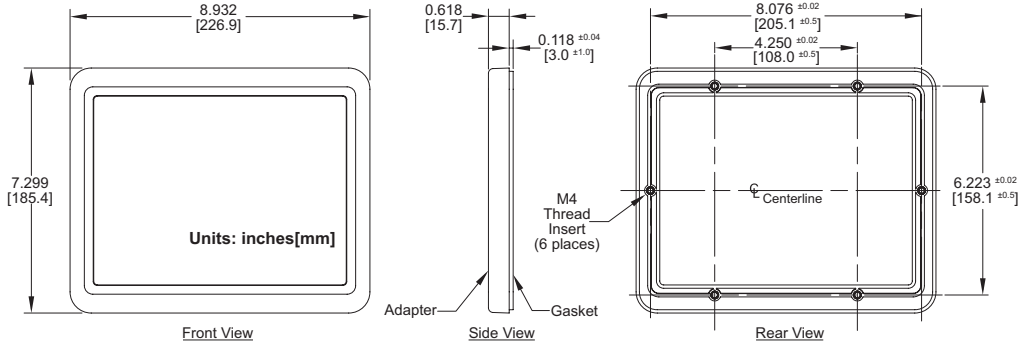

6” Adapter Plate Cutout Dimensions

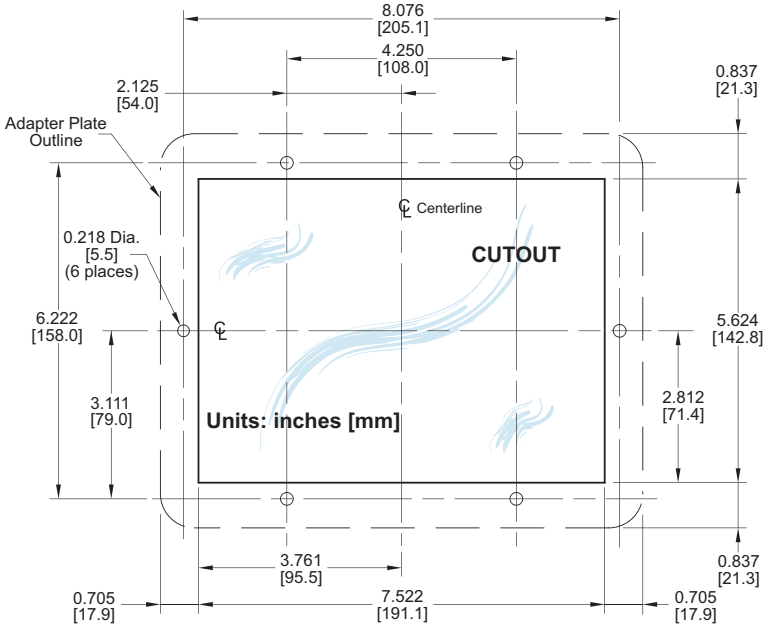

Mounting Clearances

The following drawing shows the mounting clearances for the *C-more* touch panel. There should be a minimum of 4 inches of space between all sides of the panel and the nearest object or obstruction and at least 2 inches between the rear of the panel and the nearest object or obstruction.

Note: *Make sure the touch panel is mounted on a vertical surface to allow convection air flow for proper cooling.*

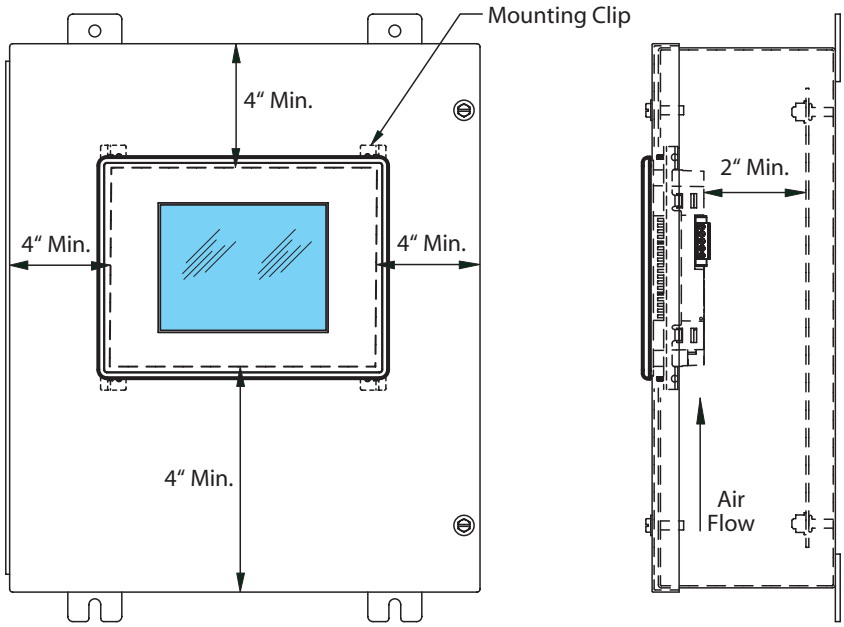

Front View

Side View

Wiring Guidelines

WARNING: To minimize the risk of potential safety problems, you should follow all applicable local and national codes that regulate the installation and operation of your equipment. These codes vary from area to area and it is your responsibility to determine which codes should be followed, and to verify that the equipment, installation, and operation are in compliance with the latest revision of these codes.
Equipment damage or serious injury to personnel can result from the failure to follow all applicable codes and standards. We do not guarantee the products described in this publication are suitable for your particular application, nor do we assume any responsibility for your product design, installation, or operation.
If you have any questions concerning the installation or operation of this equipment, or if you need additional information, please call us at 1-800-633-0405 or 770-844-4200.
This publication is based on information that was available at the time it was printed. At Automationdirect.com® we constantly strive to improve our products and services, so we reserve the right to make changes to the products and/or publications at any time without notice and without obligation. This publication may also discuss features that may not be available in certain revisions of the product.

Agency Approvals

Some applications require agency approvals for particular components. The *C-more* touch panel agency approvals are listed below:

- UL (Underwriters' Laboratories, Inc.)
- CUL (Canadian Underwriters' Laboratories, Inc.)
- CSA (Canadian Standards Association)
- CE (European Economic Union)

Marine Use

American Bureau of Shipping (ABS) certification requires flame-retarding insulation as per 4-8-3/5.3.6(a). ABS will accept Navy low smoke cables, cable qualified to NEC "Plenum rated" (fire resistant level 4), or other similar flammability resistant rated cables. Use cable specifications for your system that meet a recognized flame retardant standard (i.e. UL, IEEE, etc.), including evidence of cable test certification (i.e. tests certificate, UL file number, etc.).

***NOTE:** Wiring needs to be "low smoke" per the above paragraph. Teflon coated wire is also recommended.*

Wiring Guidelines (cont'd)

Providing Power to the Touch Panel

- **Connect** a **dedicated** 24 VDC (20.4 - 28.8 VDC) switching power supply rated for a minimum of 1.5 A to the DC connector on the rear of the ***C-more*** touch panel. Connect the ground terminal to a proper equipment ground.
- **or** install a ***C-more*** AC/DC Power Adapter (EA-AC) to the rear of the touch panel and connect an AC voltage source of 100-240 VAC, 50/60Hertz, to its AC connector.
- **then** turn on the power source and check the LED status indicators on the rear of the ***C-more*** touch panel for proper operation. See the LED Status Indicator diagram on the next page for reference.

DC Wiring Diagram

DC Wiring

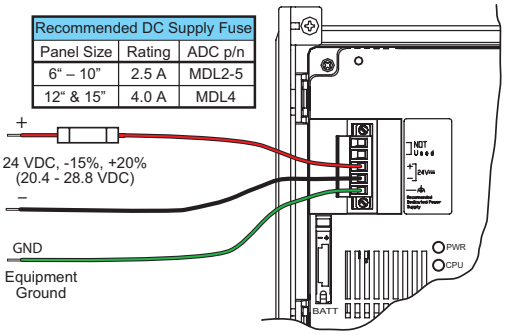

Recommended DC Power Supply:
AutomationDirect **Part No. PS24-050D**

Wiring Guidelines (cont'd)

AC Wiring Diagram

AC Wiring

AC/DC Power Adapter
EA-AC

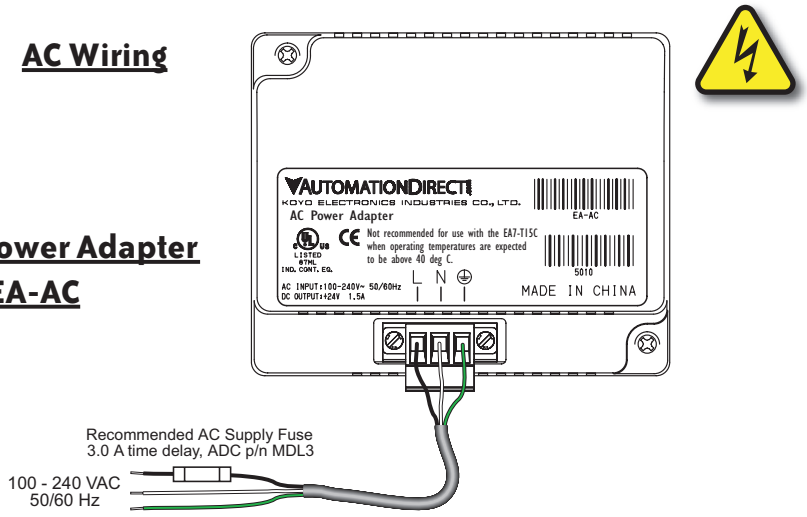

WARNING: The AC/DC Power Adapter is not recommended for use with the EA7-T15C touch panel when operating temperatures are expected to exceed 40 °C [104 °F].

Note: *Power Fault features help protect data being logged to CompactFlash during power failures. The* ***C-more*** *panel must have firmware version 1.21 Build 6.18E or higher for proper operation.*

C-more LED Status Indicators

CPU Status LED (Green, Orange & Red)	
Off	Power Off
Green	Normal – CPU Run State
Red	Memory Error
Blinking Red	Operating System not found
Blinking Orange	LCD Backlight Failure
Blinking Green	Power Loss Detection

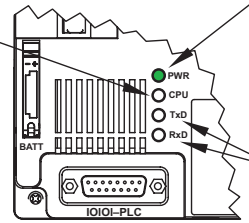

Rear View

Power LED (Green)	
On	Power On
Off	Power Off

Serial TxD/RxD LED (Green)	
On	Comm. is active
Off	No communication

System Setup Screens

In This Chapter...

Introduction 5–2
Chapter Organization 5–3
Accessing the System Setup Screens (no project loaded) 5–4
Accessing the System Setup Screens (with project loaded) 5–5
System Setup Screens – Enable Password in Software 5–7
System Setup Screens Flowchart 5–13
Main Menu 5–14
Information Menu 5–15
Setting Menu 5–19
Test Menu 5–25
Memory Menu 5–35

Introduction

The *C-more* touch panels include a series of built-in **System Setup Screens** that allow the user to view detailed information about the panel, adjust certain features, configure communications, test various functions of the touch panel, backup & restore system, recipe, log and project memory, clear memory, and reset all values and conditions back to the original factory defaults.

The following is presented to give the user a detailed step by step look at 1.) how to access the System Setup Screens, 2.) what adjustments and features are available, 3.) when and why the feature may need to be adjusted or used, and 4.) how to adjust and/or interrupt the features.

The System Setup Screens from the Main Menu are split into four different categories to make it simple for the user to select the area for viewing information, making adjustments, testing the touch panel or working with the internal and/or external memory options. The four Main Menu selections are:

Information

Here you will find detailed information in regards to the touch panel model, the panel's name, version information for the hardware, boot loader and firmware, clock source, battery status and beeper status. Also available are details on the panel's internal memory and the status of any external memory devices, such as CompactFlash memory and USB pen drives. Communication port details are also available in this area, as well as an error log to help in trouble-shooting the system.

Setting

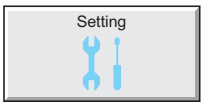

This is the area for 1.) making adjustments to the internal clock, 2.) adjusting the brightness (color panels) and contrast (grayscale panels) of the display, 3.) adjusting (calibrating) the touch panel, 4.) enabling or disabling the internal beeper, and 5.) the IP Address of the touch panel can also be configured from this menu area. Access to the IP Address Setting screen is covered later in this chapter.

Test Menu

From this sub menu, the user can 1.) test the touch panel, 2.) test the display, 3.) test the communication ports, and 4.) test both the internal beeper or the audio line output, if a speaker with an amplifier is connected. A WAV sound file is system provided for the audio line output test.

Memory

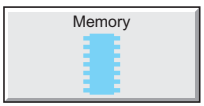

Select the Memory menu item to either backup or restore your project, log data, recipe data and/or system memory. Selections can be made to backup to optional CompactFlash memory or USB pen drive memory. The menu selections also give the user the ability to clear the memory, and there is also a selection to reset all of the touch panel settings back to the original factory defaults.

Chapter Organization

The **System Setup Screens** chapter is organized in the following order:

1.) Accessing the system setup screens with **no project loaded** will take the user directly to the **Main Menu** – page 5-4.

2.) Accessing the system setup screens with a **project loaded** will first take the user to a dialog box **warning** the user that the panel will stop running and waits for an acknowledgement – page 5-5.
a.) If a **password is not enabled**, the user is taken directly to the **Main Menu** after the warning message is acknowledged – page 5-6.
b.) If a **password is enabled**, then the **Enter Security Code** keypad is presented after the warning message is acknowledged – page 5-6.

3.) How to **enable a password** in the ***C-more*** Programming software is explained – page 5-7.

4.) **System Setup Screens** organized as shown in the following flowchart:

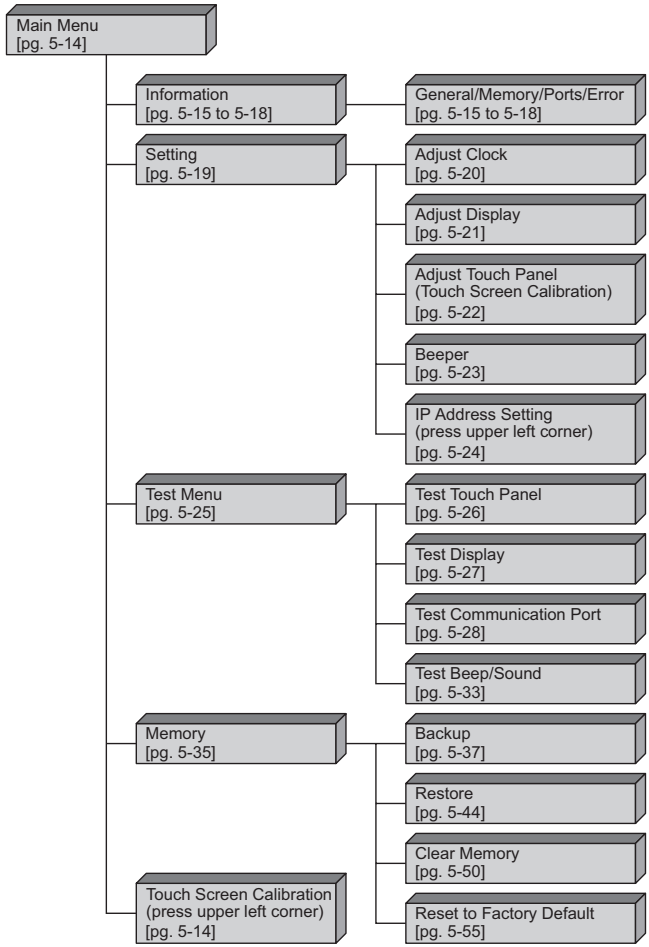

Accessing the System Setup Screens (no project loaded)

To access the **Main Menu** of the touch panel **System Setup Screens** prior to downloading a project, press the extreme upper left corner of the panel display area for 3 seconds as shown below. The **Main Menu** will then be displayed as shown below.

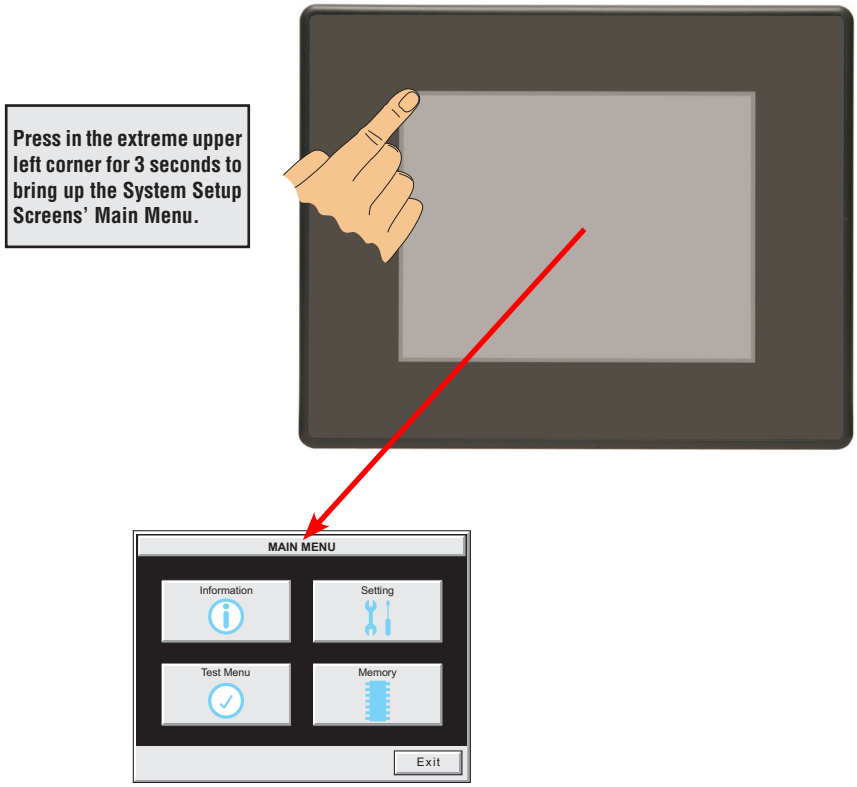

NOTE: *The ability to directly activate the* ***Main Menu*** *of the* ***System Setup Screens*** *by pressing the upper left corner of the touch panel for 3 seconds will only occur when there is no project loaded into the memory of the panel. Refer to the next section on accessing the* ***System Setup Screens*** *with a project loaded for procedure details and recommendations.*

Accessing the System Setup Screens (with project loaded)

To access the **Main Menu** of the touch panel **System Setup Screens** with a project loaded into memory, press the upper left corner of the panel display area for 3 seconds as shown below.

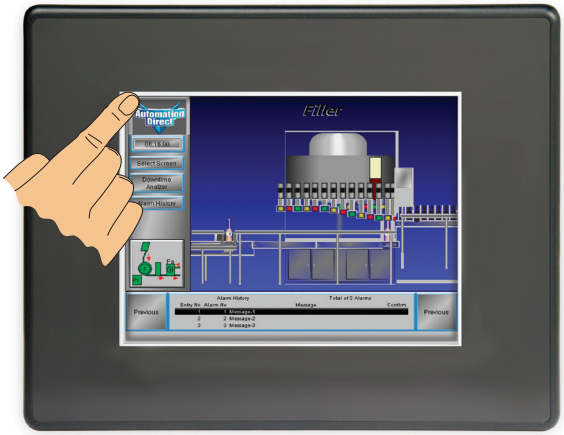

The following **WARNING** dialog box will appear on the the touch screen.

Dialog Box Actions:

- Pressing OK will display the system setup screen. See the WARNING below!
- Pressing Cancel will take you back to the project screen.
- Communications with the PLC is active while the Warning is displayed.
- The dialog box will close if no action is taken for 60 seconds.
- The dialog box will not display if the touch panel does not have a project loaded.
- The dialog box will not display if the System Screen password is enabled.

WARNING: Pressing OK at this point will STOP the PLC driver and therefore all communications between the touch panel and PLC will cease. It is strongly recommended that the password system tag "SYS SYSTEMSCREENPW" be enabled to add a safeguard step in accessing the system setup screens. See the next section for a quick overview for setting the System Tags in the Event Manager Database.

System Setup Screens (no password enabled)

If no password is enabled for the system setup screens, then pressing the **OK** button in the Warning dialog box will bring up the **Main Menu** as shown below. You can then proceed to the other system setup screens.

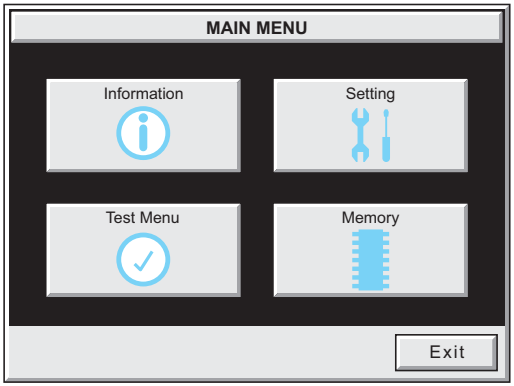

System Setup Screens (password enabled)

NOTE: *If the password system tag* ***SYS SYSTEMSCREENPW*** *is enabled, procedure described on the next page, then the* ***Enter Security Code*** *keypad shown below will be displayed. Entering the correct password code will then bring up the* ***Main Menu*** *system setup screen. If the wrong password code is entered, the keypad clear from its display the value entered and will stay present until the correct value is entered or the* ***Cancel*** *key is pressed.*

System Setup Screens – Enable Password in Software

Under the *C-more* Programming Software's **Navigation** window, select the **Function** tab, then select the Event Manager's **Database** function to display the **Event Manager Database** shown below:

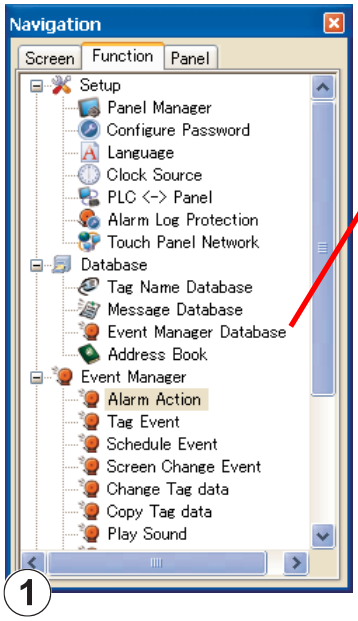

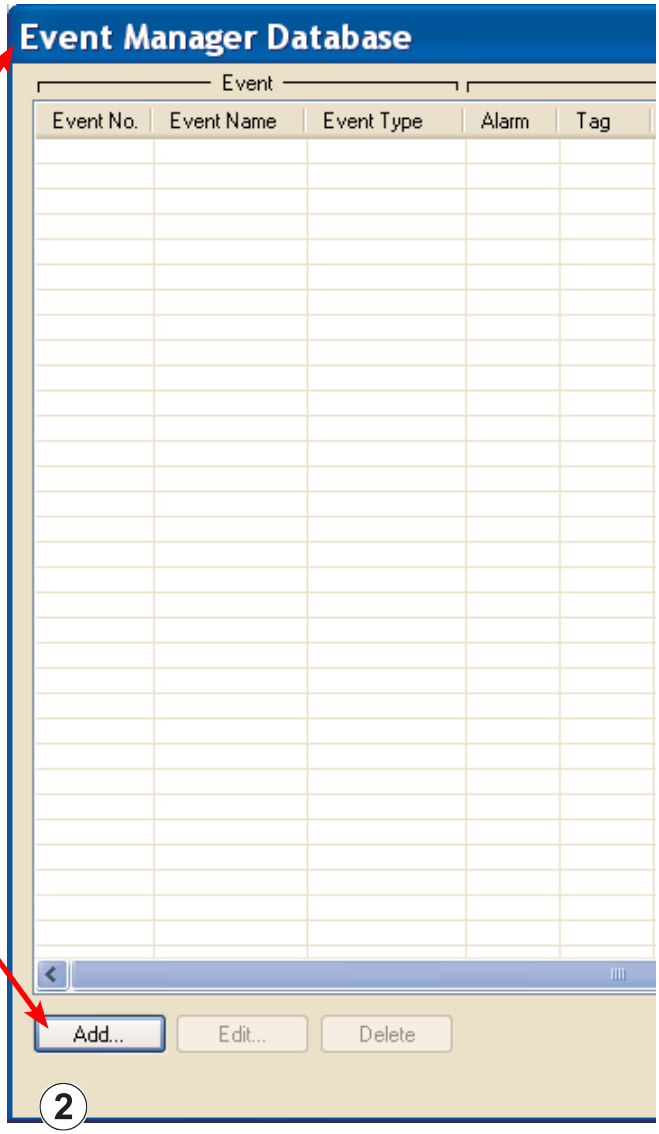

Click on the **Add** button to add an event to the database that will be used to enable the System Screen Password.

System Setup Screens – Enable Password (cont'd)

The **Event Add** dialog box will be displayed as shown next:

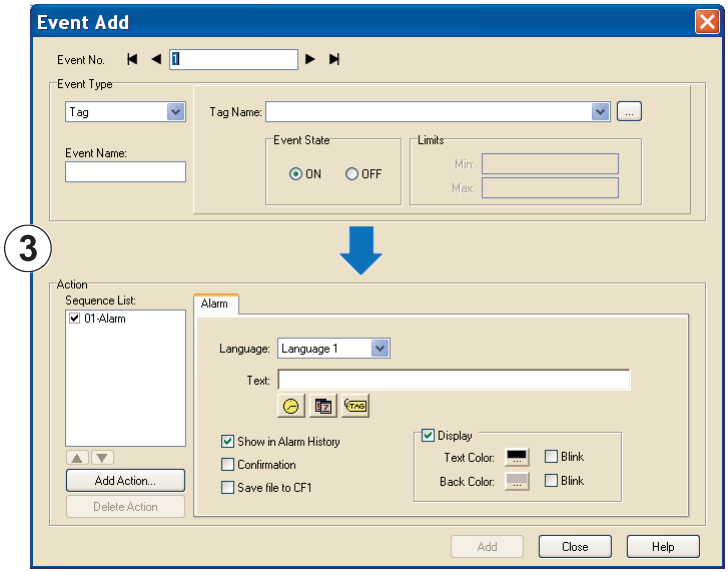

Click on the **Tag Name:** pull down menu and select the internal **System Bit On** (**SYS BIT ON**) tag as shown. This will force the tag event type to be continuously active.

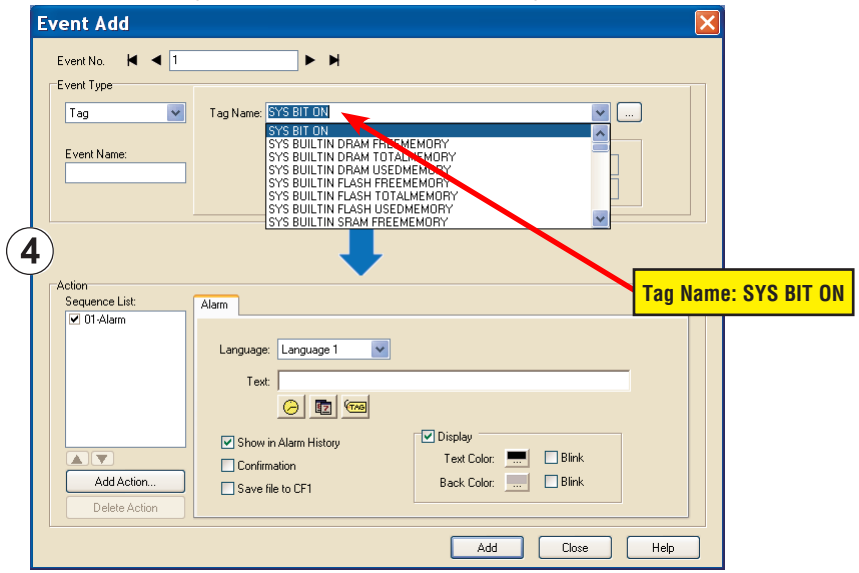

System Setup Screens – Enable Password (cont'd)

Use the **Event Name:** text box to document the event as "System Screen PW" for record keeping This is optional.

In the **Action** box, click once on the displayed **01-Alarm** under the **Sequence List:** so that **01-Alarm** is highlighted. Then click the **Delete Action** button to remove the **01-Alarm**.

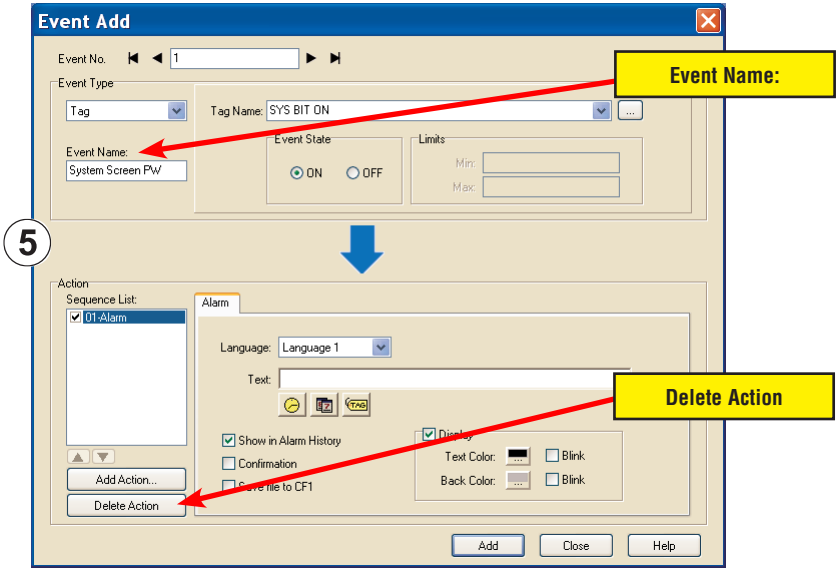

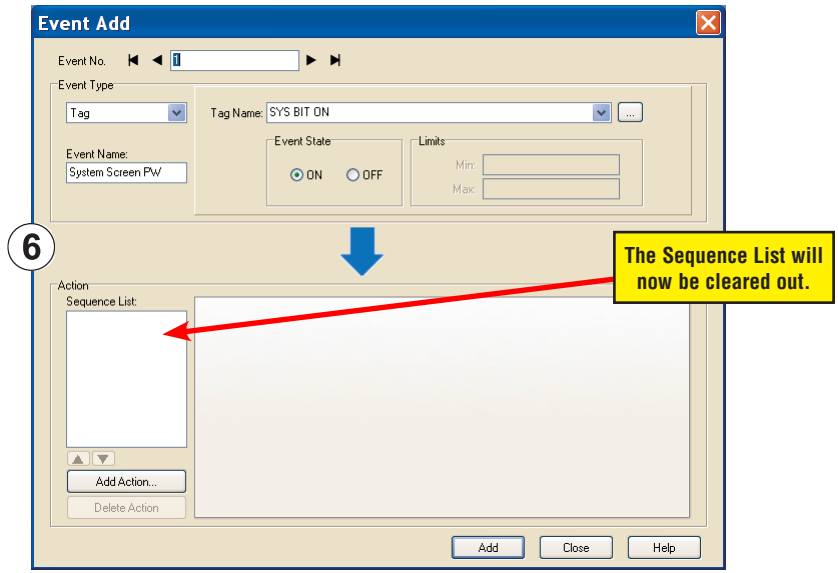

System Setup Screens – Enable Password (cont'd)

In the **Action** box, click on the **Add Action...** button. This will bring up the **Add Action** dialog box as shown below:

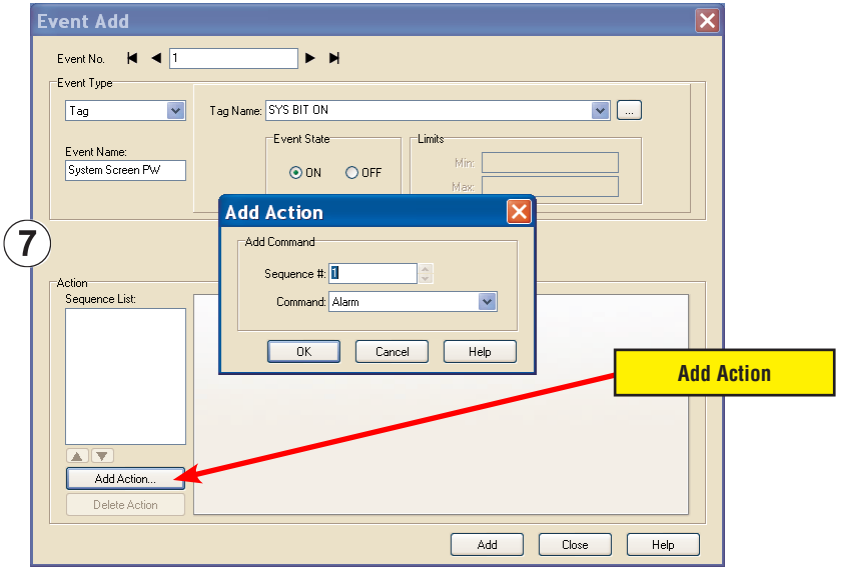

Click on the **Command:** pull down list in the **Add Command** box, select **Tag** from the list, then click **OK**.

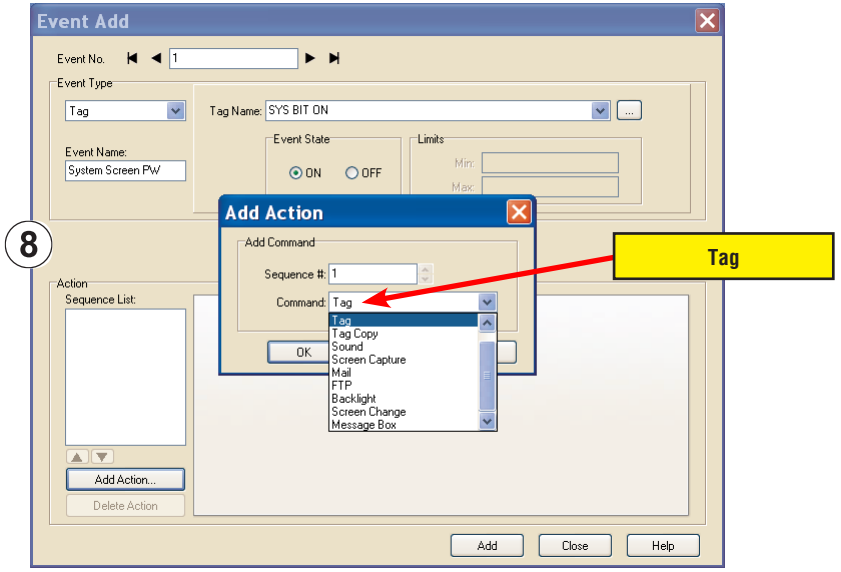

System Setup Screens – Enable Password (cont'd)

A **01-Tag** action item will then be added to the **Sequence List**.

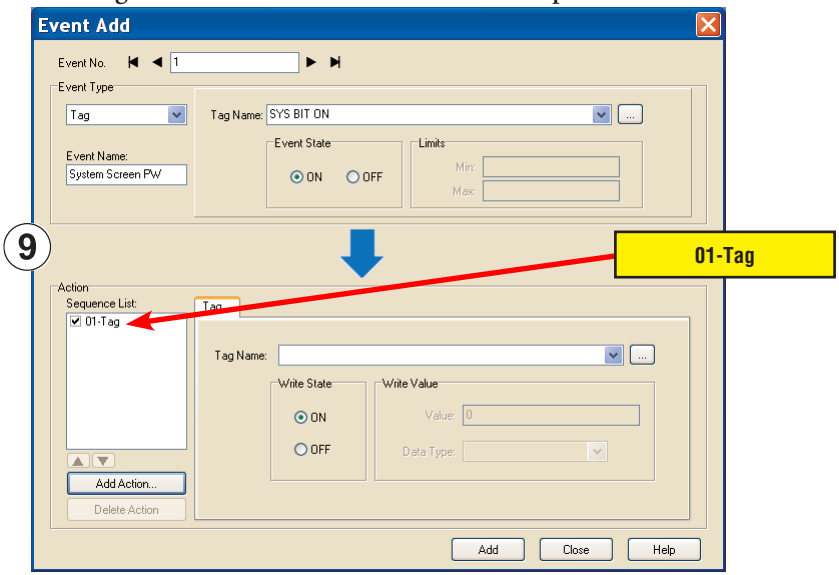

Click on the **Tag Name:** pull down list down arrow in the **Action** box's **Tag** tab, select **SYS SYSTEMSCREENPW** from the list, and click **OK**.

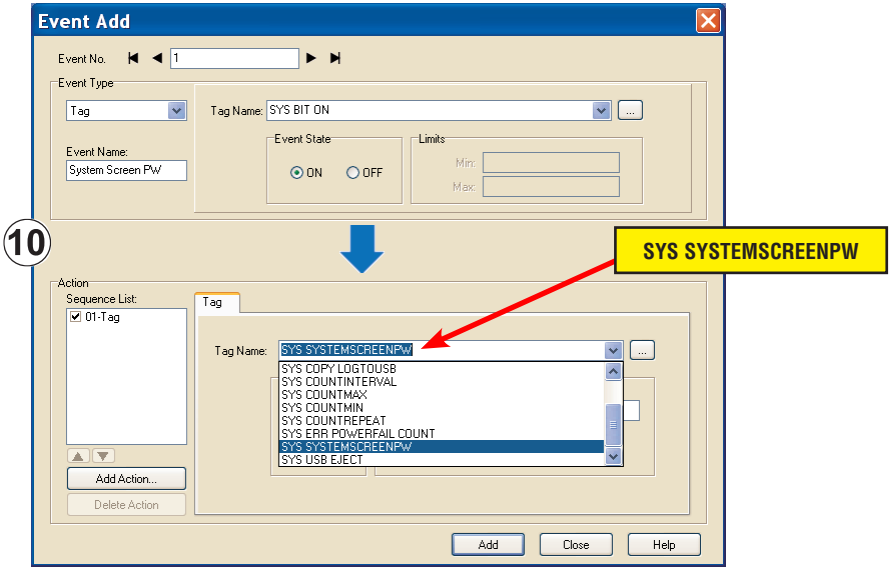

System Setup Screens – Enable Password (cont'd)

Enter a numeric value into the **Value:** box, such as "777". This value becomes the **Password** code to access the **System Setup Screen's Main Menu**.

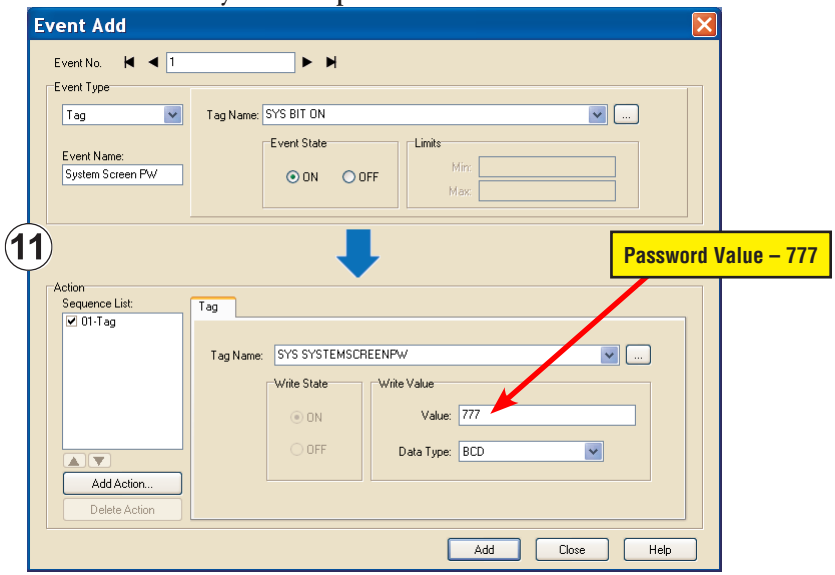

Click the **Add** button in the Event Add dialog box and then the **Close** button to return to the **Event Manager Database**. You now will see that the first event in the database is for the **System Screen Password** and it is enabled.

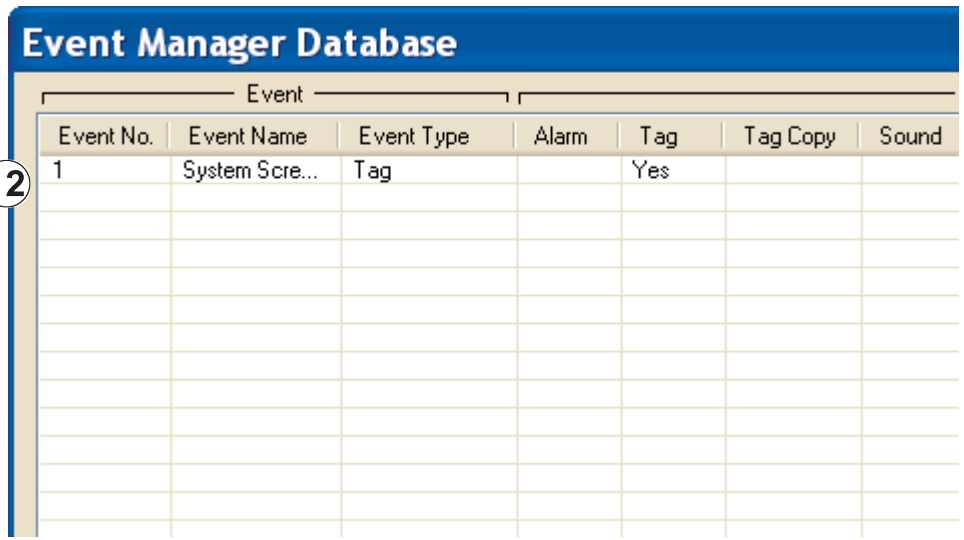

System Setup Screens Flowchart

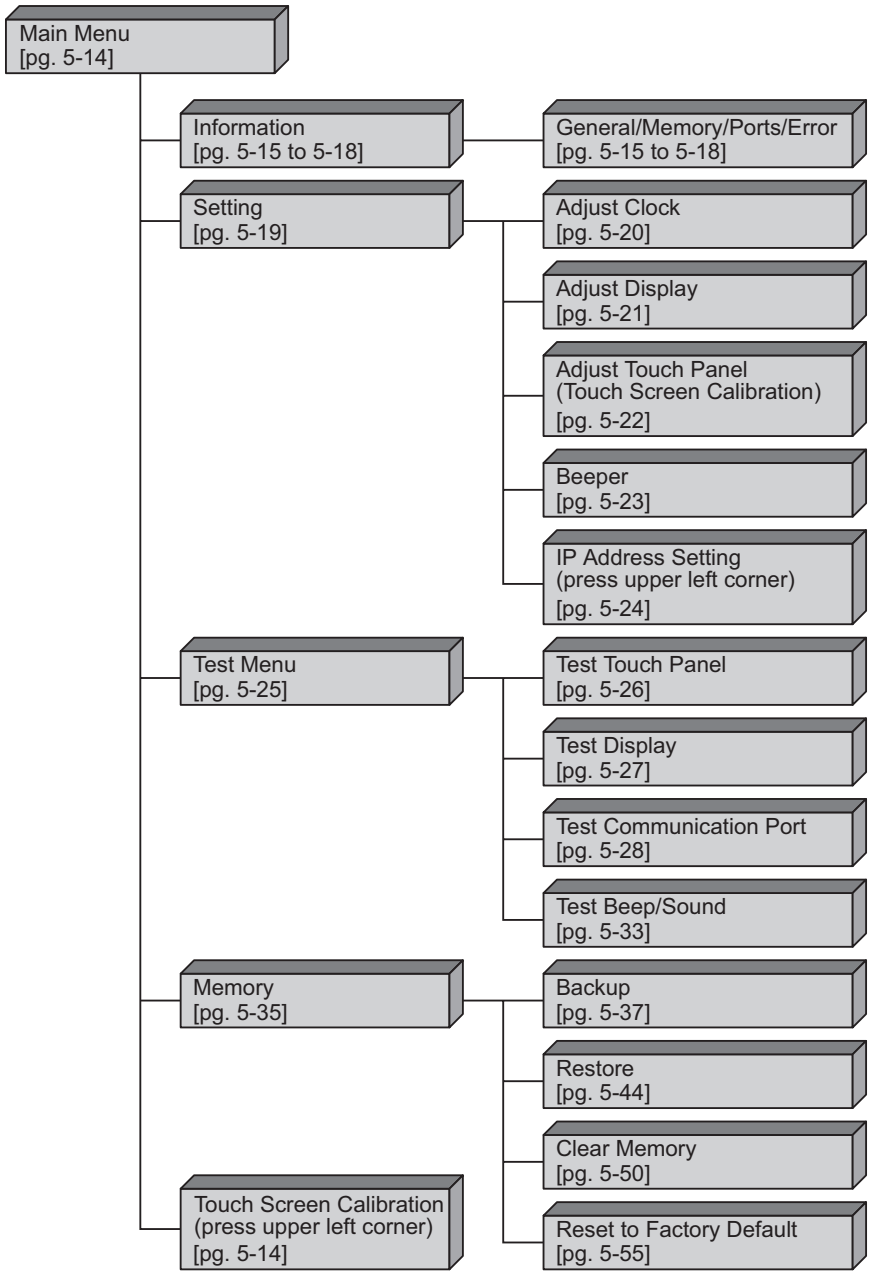

Main Menu

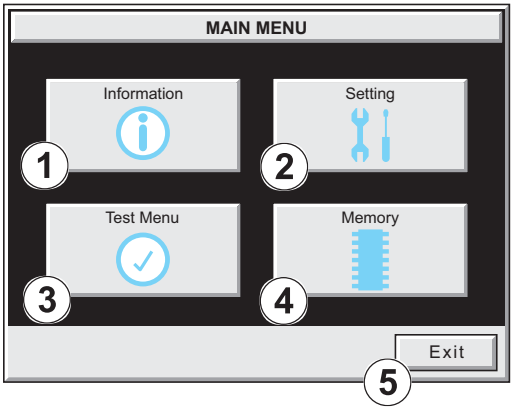

The **Main Menu** system setup screen is the top layer in the menu structure.

The menu is displayed at full screen on the 6 inch touch panel models. It is displayed in the center on the 8, 10, 12, or 15 inch models.

Item No.	Function	Description	Comment
1	**Information**	Press to go to the **Information Menu**.	
2	**Setting**	Press to go to the **Setting Menu**.	
3	**Test Menu**	Press to go to the **Test Menu**.	
4	**Memory**	Press to go to the **Memory Menu**.	
5	**Exit**	Press to return to the user screen.	
6	**Touch Screen Calibration**	While the **Main Menu** system setup screen is being displayed, the extreme upper left corner of the touch panel can be pressed for 3 seconds to access the **Touch Screen Calibration** display.	This feature is only used if the touch panel data becomes corrupted and touching the **Main Menu** buttons does not work. It allows a shortcut to the touch panel calibration screen.

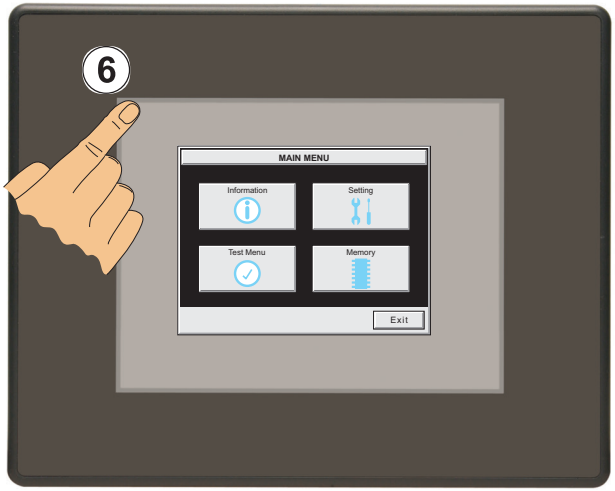

Information Menu – General tab

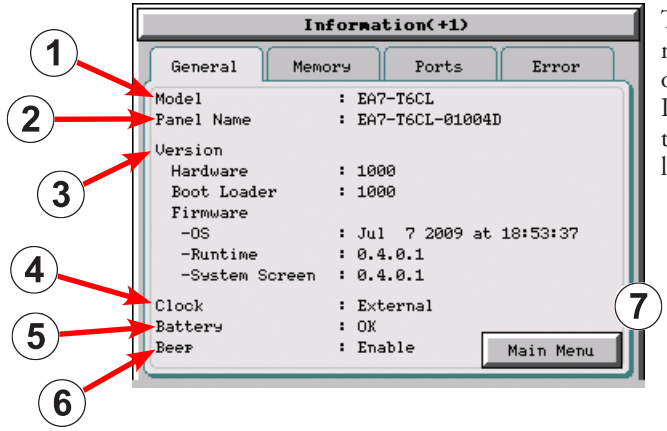

The **General** tab under the Information menu provides detailed information of the ***C-more*** Touch Panels model, Panel Default Name based on Model type and MAC address, hardware, boot loader and firmware versions, etc.

5

Item No.	Function	Description	Comments
1	**Model**	EA7-S6M-R, EA7-T6CL-R, EA7-S6C-R, EA7-S6M, EA7-T6CL, EA7-S6C, EA7-T6C EA7-T8C, EA7-T10C, EA7-T12C, EA7-T15C	
2	**Panel Default Name**	[Model Name]-01XXXX "01 XXXX" is the lower 3 bytes of the Mac Address MAX: 15 characters (15 bytes)	e.g. EA7-S6M-01004D This is the default name. The name can be changed in the ***C-more*** Programming Software.
3	**Version**	1.)Hardware: XXXX 2.)Boot loader: XXXX 3.)Firmware a) OS:Timestamp of NK.BIN file b) Runtime: X.X.X.X (Version of Runtime.EXE file) c) System Screen: X.X.X.X (Version of Panel.exe file)	Files reside in the ***C-more*** touch panel's memory.
4	**Clock**	Internal/External clock selection.	Configured in the ***C-more*** Programming Software.
5	**Battery**	Battery status, either **OK** or **Battery Low**.	
6	**Beep**	Enable/Disable the internal beeper.	Configurable in the **Setting Menu – Beeper** shown on page 5-23 or in the ***C-more*** Programming Software.
7	**Main Menu**	Press to return to the **Main Menu** screen.	**Main Menu** shown on page 5-14.

Information Menu – Memory tab

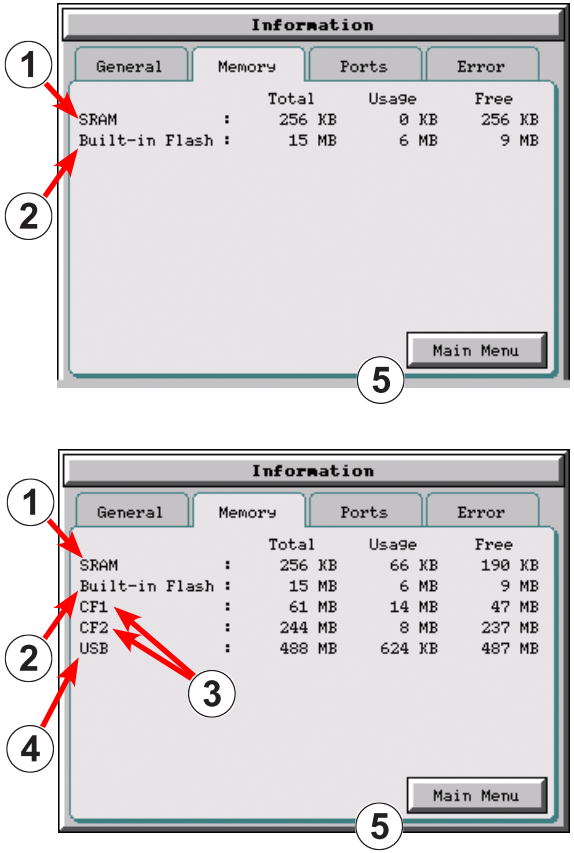

C-more Memory Organization

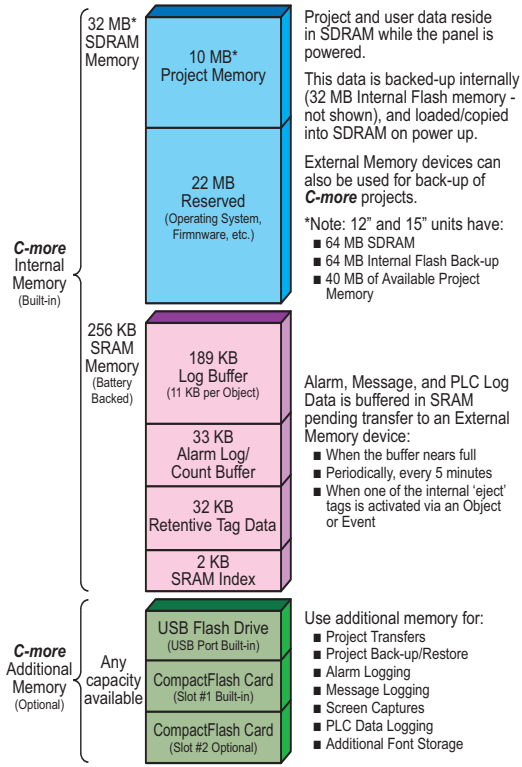

Project and user data reside in SDRAM while the panel is powered.

This data is backed-up internally (32 MB Internal Flash memory - not shown), and loaded/copied into SDRAM on power up.

External Memory devices can also be used for back-up of ***C-more*** projects.

*Note: 12" and 15" units have:
- 64 MB SDRAM
- 64 MB Internal Flash Back-up
- 40 MB of Available Project Memory

Alarm, Message, and PLC Log Data is buffered in SRAM pending transfer to an External Memory device:
- When the buffer nears full
- Periodically, every 5 minutes
- When one of the internal 'eject' tags is activated via an Object or Event

Use additional memory for:
- Project Transfers
- Project Back-up/Restore
- Alarm Logging
- Message Logging
- Screen Captures
- PLC Data Logging
- Additional Font Storage

Item No.	Function	Description	Comment
1	**SRAM System Memory**	1.) Total: 2.) Usage: 3.) Free:	Size of unit displayed: 1.) KB When size is 1 to 999 bytes. It will be shown as 1KB. 2.) KB or MB 3.) MB or GB
2	**Built-in Flash Memory**	1.) Total: 2.) Usage: 3.) Free:	
3	**Expansion Memory 1.) CF1: 2.) CF2: (only visible when present)**	1.) Total: 2.) Usage: 3.) Free: Note: N/A - not available on base featured models (–R)	
4	**Expansion Memory 3.) USB: (only visible when present)**	1.) Total: 2.) Usage: 3.) Free:	
5	**Main Menu**	Press to return to the **Main Menu** screen.	

Information Menu – Ports tab

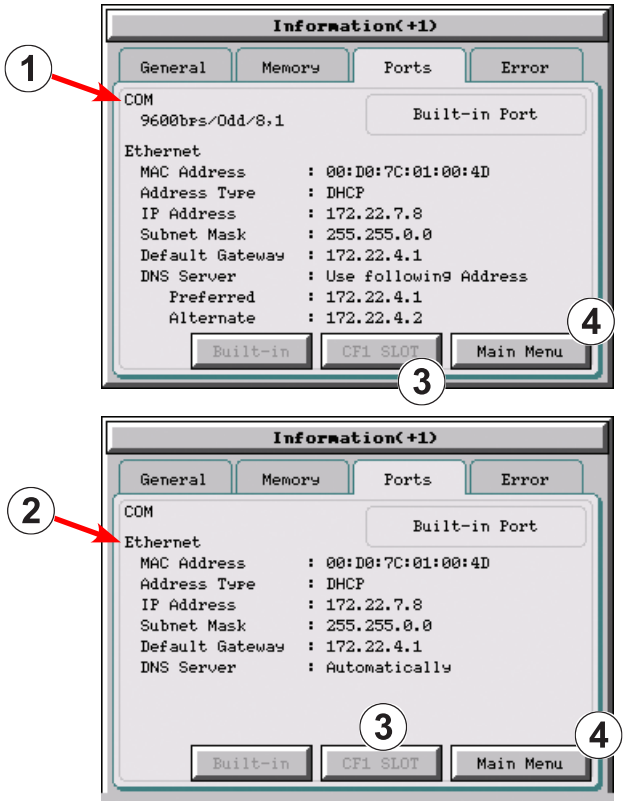

Item No.	Function	Description	Comment
1	**COM (Built-in Ports)**	PLC Serial Communications Port Settings: baud rate/party/data bit, stop bit	Configured in the ***C-more*** Programming Software.
2	**Ethernet (Built-in Ports)**	Ethernet Settings: MAC Address: 00 D0 7C 01 XX XX Address Type: DHCP/Static IP Address: Subnet Mask: Default Gateway: DNS: 1.) Automatically 2.) Use Designated Address Note: N/A - not available on base featured models (–R)	Configurable in the **Setting Menu – IP Address Setting** shown on page 5-24 or in the ***C-more*** Programming Software.
3	**Ethernet (CF1 Slot)**	Future	Future
4	**Main Menu**	Press to return to the **Main Menu** screen.	

Information Menu – Error tab

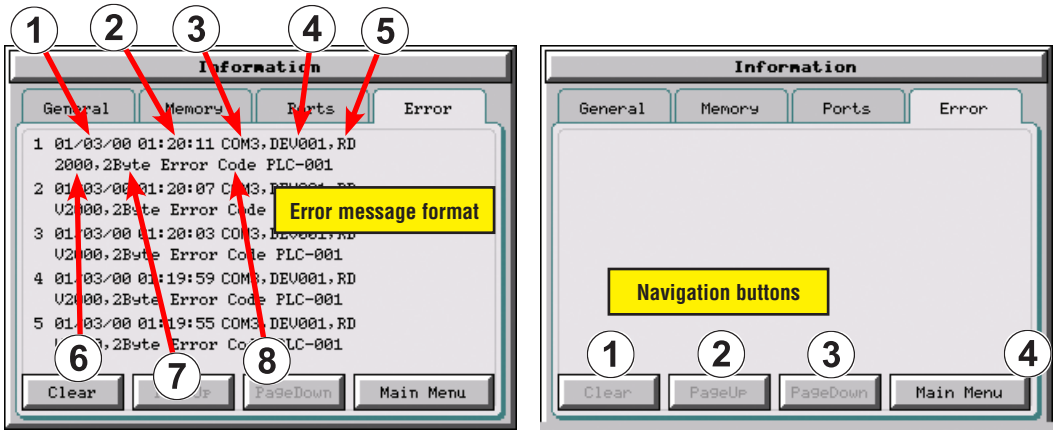

5

Error message format:

Item No.	Function	Description	Comment
Order of error message functions: **Error Number, Date, Time, Error Port, Device Name, Error Type, PLC Device, Access Bytes, Error Message**			
1	**Date**	Format: MM/DD/YY	Date error occurred.
2	**Time**	Format: HH/MM/SS	Time error occurred.
3	**Error Port**	PLC Serial Communications Port: Ethernet:	
4	**Device Name**	The assigned device name in the programming software.	Configurable in the ***C-more*** Programming Software Panel Manager
5	**Error Type**	RD: Read WT: Write	
6	**PLC Address**	The assigned address of the PLC that caused the error.	
7	**Access Bytes**	The number of access bytes.	
8	**Error Message**	The error message is the same as the message displayed in the upper left of the ***C-more*** touch panel's display.	A list of Error Massages is shown in Appendix A

Error message navigation buttons:

Item No.	Function	Description	Comment
1	**Clear**	Press to clear all error messages. This button is grayed out when there are no error messages to display.	
2	**Page Down**	Press to go to to the next page. This button is grayed out when there is no error messages on the next page.	
3	**Page Up**	Press to go to the previous page. This button is grayed out when there is no error messages on the previous page.	
4	**Main Menu**	Press to return to the **Main Menu** screen.	

Setting Menu

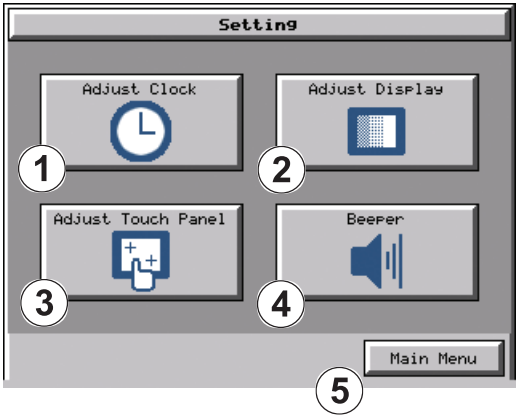

The **Setting Menu** is used to adjust the time & date, adjust the contrast or brightness of the display depending on which model is being used, adjust (calibrate) the touch screen, and enable or disable the internal beeper.

Item No.	Function	Description	Comments
1	**Adjust Clock**	Press to go to the **Adjust Clock** screen.	
2	**Adjust Display**	Press to go to the **Adjust Display** screen.	
3	**Adjust Touch Panel**	Press to go to the **Adjust Touch Panel** screen.	
4	**Beeper**	Press to go to the **Adjust Beeper** screen.	
5	**Main Menu**	Press to return to the **Main Menu** screen.	
6	**IP Address setting**	While the **Setting Menu** system setup screen is being displayed, the extreme upper left corner of the touch panel can be pressed for 3 seconds to access the IP Address setting screen.	The IP Address setting screen is only accessible form the **Setting Menu** screen as described. There is no direct button to call it from any of the setup screens. The IP Address can also be assigned in the ***C-more*** Programming Software.

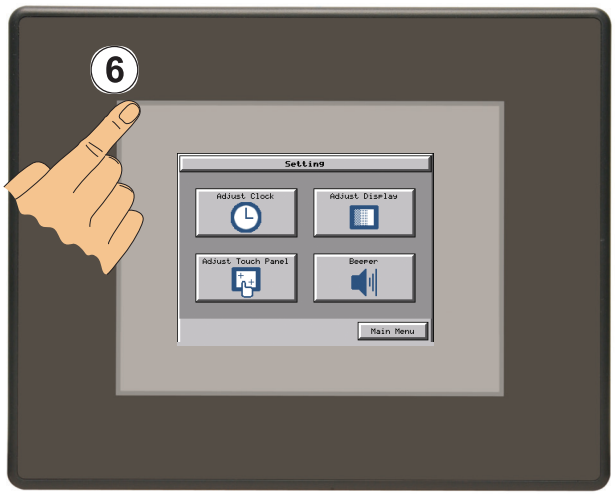

Setting – Adjust Clock

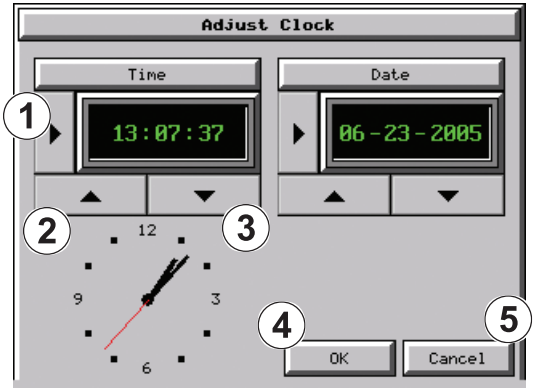

Color Touch Panel

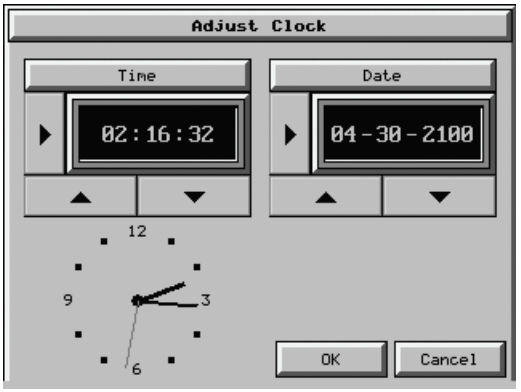

Grayscale Touch Panel

Item No.	Function	Description	Comments
1	**Select**	**Time:** Each press of the **Select** button will cycle thru the following settings. 1.) No Selection to Hours 2.) Hours to Minutes 3.) Minutes to Seconds 4.) Seconds back to Hours **Date:** Each press of the **Select** button will cycle thru the following settings. 1.) Month to Day 2.) Day to Year 3.) Year back to Month	
2	**Up**	Press to increment the value by "1" with each press.	
3	**Down**	Press to decrement the value by "1" with each press.	
4	**OK**	Press to accept the changes.	
5	**Cancel**	Press to return to the **Setting Menu** screen without accepting the changes.	

NOTE: *The function buttons used to adjust the clock settings on the panel's setup screen are* ***disabled*** *if an* ***External*** *clock source is selected in the* ***C-more*** *programming software. The choice of an internal or external clock source is available by selecting* ***Clock Source*** *in the* ***C-more*** *programming software under the* ***Main Menu*** *drop down function* ***Setup.***

NOTE: *The panel's clock can also be adjusted from the* ***C-more*** *programming software. The* ***Adjust Clock*** *function can be accessed in the software by selecting* ***Adjust Clock*** *under the* ***Main Menu*** *drop down function* ***Panel*** *or selecting* ***Adjust Clock*** *under the* ***Panel*** *tab in the software's* ***Navigation*** *window.*

Setting – Adjust Display

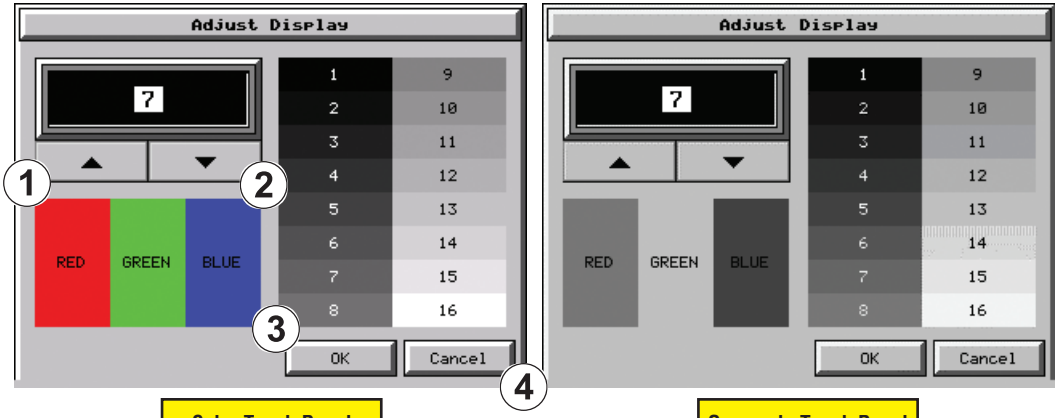

Color Touch Panel

Grayscale Touch Panel

Item No.	Function	Description	Comments
The STN type display models can have the contrast adjusted. The TFT type display models can have the brightness adjusted. See the table below.			
1	**Up** ▲	Press to increment the value by "1" with each press.	
2	**Down** ▼	Press to decrement the value by "1" with each press.	
3	**OK**	Press to accept the changes.	
4	**Cancel**	Press to return to the **Setting Menu** screen without accepting the changes.	

Model	Selection Range		Default	
	Brightness	Contrast	Brightness	Contrast
TFT Models: **EA7-T6CL-R, EA7-T6CL, EA7-T6C** **EA7-T8C, EA7-T10C,** **EA7-T12C & EA7-T15C**	1 to 7	N/A	7	N/A
STN Grayscale: **EA7-S6M-R &** **EA7-S6M** **STN Color:** **EA7-S6C-R** **EA7-S6C**	N/A	1 to 7	N/A	6

Setting – Touch Screen Calibration

This procedure is used to calibrate the touch screen to ensure accuracy of the touch areas. There are five points on the touch screen that the calibration is based around. The adjustment relies on very narrow areas for the calibration points.

NOTE: *The panel will display the Touch Screen Calibration window on power up until the calibration procedure is completed and saved.*

Item No.	Function	Description	Comment
1	**Points 1a thru 1e**	The touch screen calibration crosshairs will appear individually in the order of point 1a thru 1e respectively as each proceeding crosshair is pressed.	If the touched co-ordinate point is too far off from normal, then the procedure will return to Point 1a.
2	**Cancel**	Press to return to the **Setting Menu** screen without accepting the changes.	
3	**Press here to save & quit.**	Press to accept the changes and return to the **Setting Menu** screen.	If you do not save, you will have to calibrate the panel again after the next power cycle.
4	**Press here to retry.**	The current adjustment data is canceled and the procedure is returned to point 1a.	

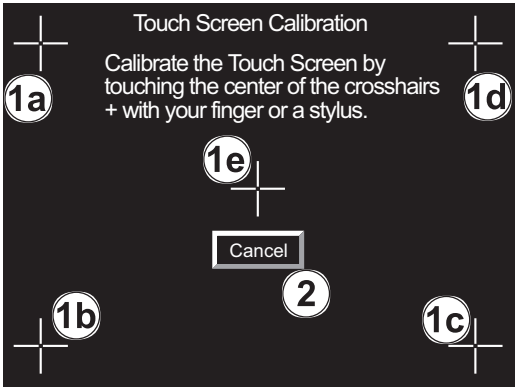

Points 1a thru 1e

Final

Setting – Beeper

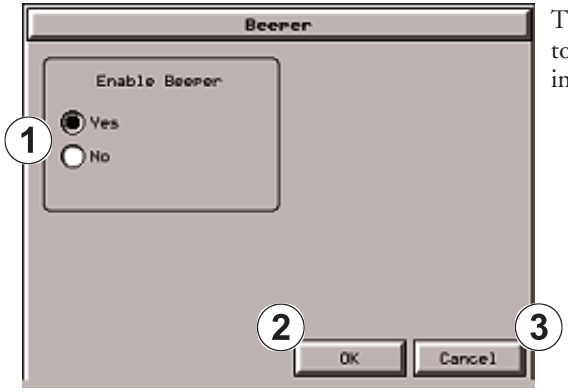

This system setup screen function is used to enable or disable the touch panel's internal beeper.

Item No.	Function	Description	Comments
1	**Yes**	Change Enable to Beeper.	
2	**No**	Change Disable to Beeper.	
3	**OK**	Press to accept the changes and return to the **Setting Menu** screen.	
4	**Cancel**	Press to return to the **Setting Menu** screen without accepting the changes.	

__NOTE:__ The project settings in the __C-more__ programming software __Panel Manager__ will override the touch panel's internal setting upon initial download.

Setting – IP Address Setting

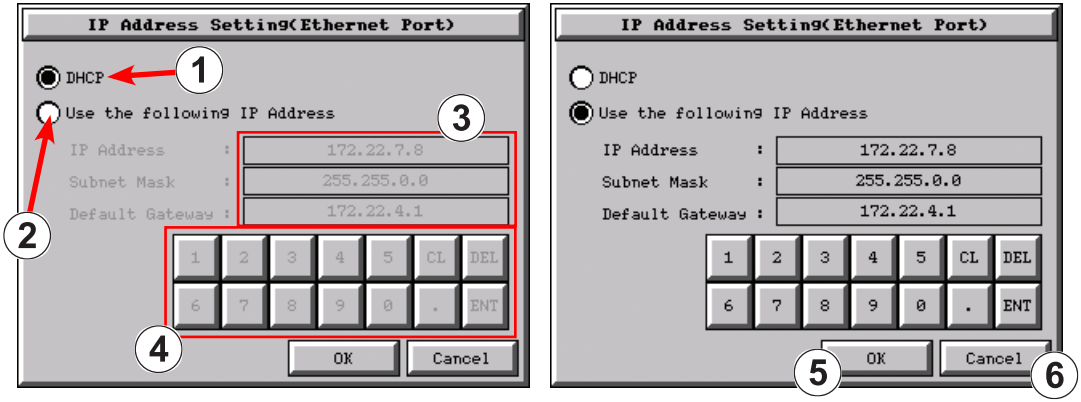

Item No.	Function	Description	Comment
1	**DHCP**	"DHCP" is enabled as the default when this system setup screen is first selected. All of the other selections on this screen are dimmed when "DHCP" is selected and are not available.	
2	**IP Address**	The "Use the following IP Address" setting is selected when its radio button is pressed. An IP Address can be assigned as follows: 1.) Select the address type: a.) IP Address b.) Subnet Mask c.) Default Gateway 2.) Use the numerical keypad to input the address. Use the decimal key to enter the dot separator. 3.) Press the **"ENT"** key when finished with each field.	Note: If an Ethernet cable is not connected to the touch panel from an active Ethernet device, then the IP Address will show as 0.0.0.0.
3	**IP Address** **Subnet Mask** **Default Gateway**	Select the field that needs to be assigned by touching the entry value and use the keypad to enter the desired address.	Each field can be independently assigned.
4	**Keypad**	The keypad is used to enter the Address: Use the numeric keys and the **"dot"** key to enter the address, e.g: 192.168.10.1 **"ENT"** = Enter key sets value **"CL"** = Clear value entered **"DEL"** = Delete 1 character with each press	The "**ENT**" key must be pressed to accept the entry. If the "**ENT**" key is not pressed, then the previous value will remain when another area is selected or the "**Cancel**" key is pressed.
5	**OK**	Press to accept the changes and return to the **Setting Menu** screen.	
6	**Cancel**	Press to return to the **Setting Menu** screen without accepting the changes.	

Test Menu

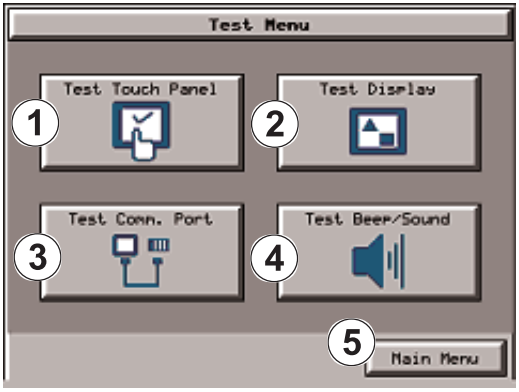

The **Test Menu** gives the user the ability to test the operation of the touch screen, test the LCD display, test the various communication ports, and also test the internal beeper and the audio line out through an user supplied amplified (stereo) speaker(s).

Item No.	Function	Description	Comments
1	**Test Touch Panel**	Press to go to the **Test Touch Panel** screen.	
2	**Test Display**	Press to go to the **Test Display** screen.	
3	**Test Communication Port**	Press to go to the **Test Communication Port** screen.	
4	**Test Beep/Sound**	Press to go to the **Test Beep/Sound** screen.	
5	**Main Menu**	Press to return to the **Main Menu** screen.	

Test Menu – Test Touch Panel

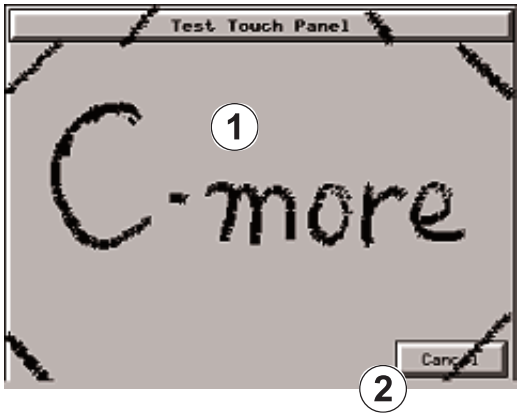

Using this test, normal or unusual operation of the analog touch panel can be determined.

Testing:

If an area of the touch screen is suspected to be inoperable, touch that area of the screen while in the **Test Touch Panel** screen mode. The screen pixels should turn black in that area. If the screen pixels do not turn black when touched, then the touch screen is defective or needs to be calibrated. See **Setting - Adjust Touch Screen** on page 5-22.

Item No.	Function	Description	Comments
1	**Touch area**	Display Size / Touch Area 6 Inch / 320 X 240 8/10 Inch / 640 X 480 12 Inch / 800 X 600 15 Inch / 1024 X 768	Both the title bar (Test Touch Panel) and **Cancel** button can be drawn across to test the touch operation.
2	**Cancel**	Press to return to the **Test Menu** screen.	

***Note**: The Touchscreen is designed to respond to a single touch. If it is touched at multiple points at the same time, an unexpected object may be activated.*

Test Menu – Test Display

There are two different test patterns that may be run on the LCD display to allow the user to check for display screen defects. If the screen is **not** touched within 3 seconds of **Test Pattern 1** being displayed, then **Test Pattern 2** will be displayed until the screen is touched, otherwise **Test Pattern 1** will remain until cancelled.

Test Pattern 1 displays a test pattern of 16 grayscale graduations and RGB colors.

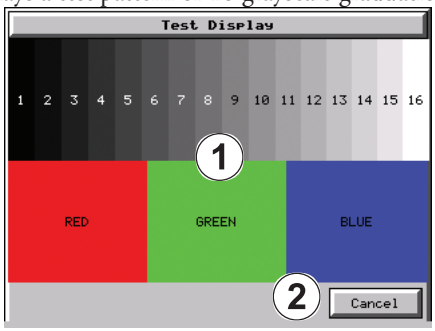

Test Pattern 2 will follow the pattern as shown in the following chart with the color wiping across the screen in the direction indicated by the arrows, then repeats:

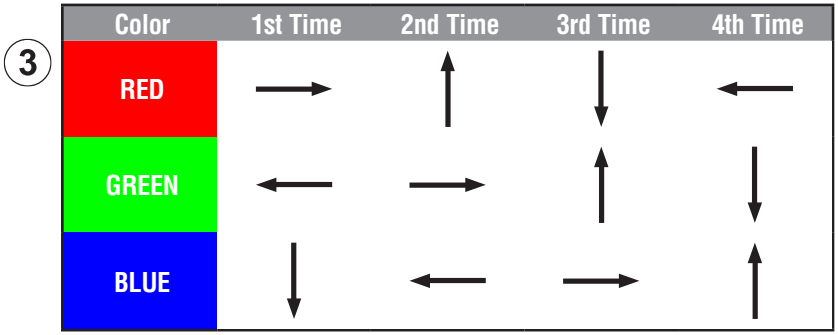

Item No.	Function	Description	Comments
1	**Touch the Test Display screen.**	Press the screen anywhere except the **Cancel** button and the shown **Test Pattern 1** remains.	If the **Test Display** screen is not touched, then in three seconds the display will move to **Test Pattern 2**.
2	**Cancel (Test Pattern 1)**	Press to return to the **Test Menu** screen.	
3	**Touch Anywhere (Test Pattern 2)**	Touch the sceen anywhere during **Test Pattern 2** and return to the **Test Menu** screen.	

Test Results: If any pixels on the screen do not appear the same color as the surrounding pixels, the LCD screen may be defective. A single pixel gone bad is relatively common. Surrounding pixels going bad over time is another indication the LCD screen may be defective.

Test Menu – Test Communication Ports: Serial

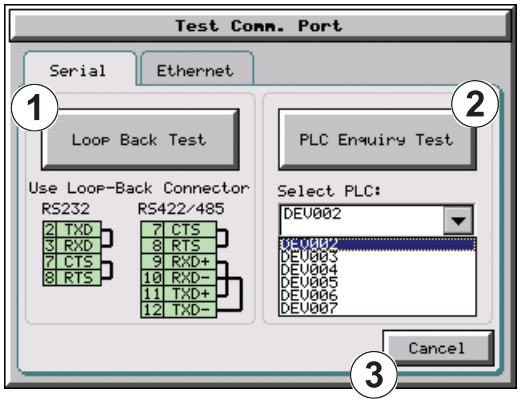

The following test can be used to check the operation of the serial communication port, with the use of a loop back connector and can also check the status of the serial communications to any connected and configured PLC.

Continued on the next two pages.

Item No.	Function	Description	Comments
1	**Loop Back Test**	This function checks the serial comm port for proper operation with a loop back connector.	
2	**PLC Enquiry Test**	This function allows the ability to select any PLC that that may be connected to the touch panel via a serial connection and checks to see if the communications are working correctly.	Note: The PLC serial communications port settings must be configured in the ***C-more*** programming software.
3	**Cancel**	Press to return to the **Test Menu** screen.	

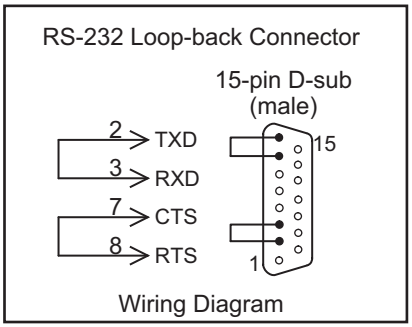

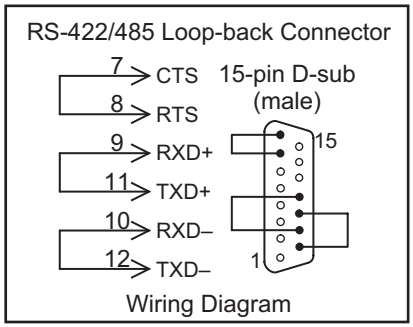

Test Menu – Serial Port Test

PLC Serial Comm Port – Loop Back Test

Item No.	Function	Description	Comments
1	**Determine Loop Back Connector**	1.) When testing an RS-232C serial connection, connect pin 2 to 3 and pin 7 to 8 on an appropriate D-SUB 15-pin male connector and plug it into the serial PLC comm port on the rear of the touch panel. 2.) When testing an RS-422 or RS-485 serial connection, connect pin 9 to 11, pin 10 to 12 and pin 7 to 8 on an appropriate D-SUB 15-pin male connector and plug it into the serial PLC comm port on the rear of the touch panel.	
2	**Start Test**	Press the **Loop Back Test** button to start the serial comm port test.	
3	**Test Results**	1.) Bytes Sent: The number of bytes sent after a test is started. 2.) Receive Counts: The number of bytes which are received after the test is started. 3.) Error Counts: The number of bytes which have not been received after the test is started. 4.) RTS/CTS Test: Pass/Fail RTS is turned on and if CTS receives the signal then the test shows “Pass”, otherwise the test shows “Fail”.	Note: The test will continue to run until the **Cancel** button is pressed. If there are any error counts, check the loop back connector. If it is OK, call Tech Support.
4	**Cancel**	Press to return to the **Test Comm. Port** screen.	

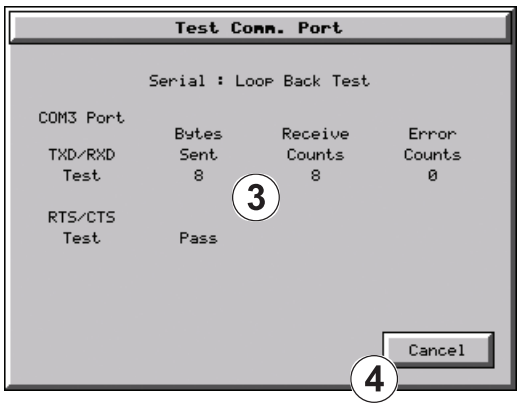

Test Menu – PLC Enquiry Test: Serial Connection

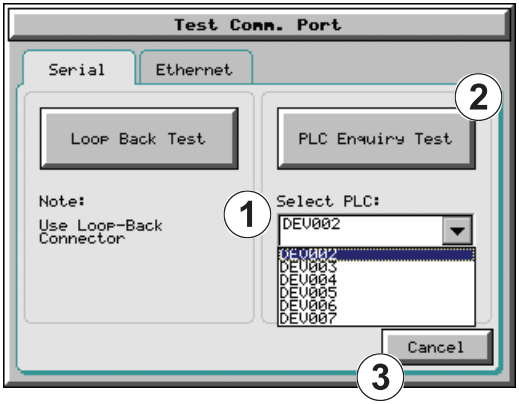

This function allows the ability to select any PLC that may be connected to the touch panel through a serial comm. port connection and checks to see if the communications are working correctly.

Note: *The communications protocol for the PLC being selected must be configured the same as the* ***C-more*** *touch panel. The touch panel's PLC serial communications are configured using the* ***C-more*** *Programming Software's Panel Manager.*

Item No.	Function	Description	Comments
1	**Select PLC**	Select any PLC that is shown in the drop down menu. The PLC selected will connect to the touch panel at the time of a test.	Only PLC's that have been configured in the ***C-more*** Programming Software will appear in the **Select PLC:** list.
2	**PLC Enquiry Test**	Four test read packets are sent to the selected PLC. Test result will be either Pass or Fail.	
3	**Cancel**	Press to return to the **Test Menu** screen.	

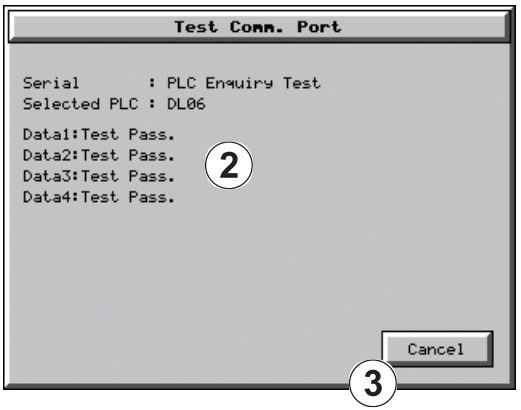

Test Menu – Test Communication Ports: Ethernet

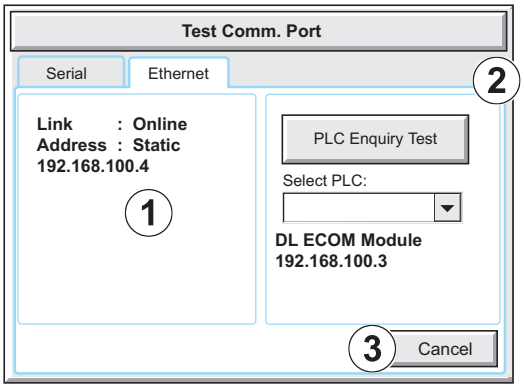

The following test feature can be used to check the operation of the Ethernet communication port by indicating if an Ethernet link has been established or not, and can also check the status of the Ethernet communications to any connected PLC.

Base featured models (-R) do not include an Ethernet port, therefore this check is not displayed.

Note: *The communications protocol for the PLC being selected must be configured the same as the* ***C-more*** *touch panel. The touch panel's PLC serial communications are configured using the* ***C-more*** *Programming Software's Panel Manager.*

Item No.	Function	Description	Comments
1	**Ethernet Connected**	This area displays information to whether an Ethernet link has been established for the touch panel's Ethernet comm port or not. Displays panel's IP address and shows whether it is static or assigned by a DHCP server.	
2	**PLC Enquiry Test**	This function allows the ability to select any PLC configured in the project that may be connected to the touch panel via an Ethernet connection and checks to see if the communications are working correctly.	
3	**Cancel**	Press to return to the **Test Menu** screen.	

Example of displayed message when the touch panel's Ethernet port is not connected.

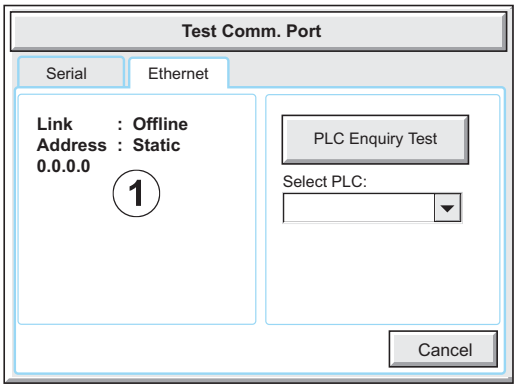

Typical Ethernet connection with Ethernet switch.

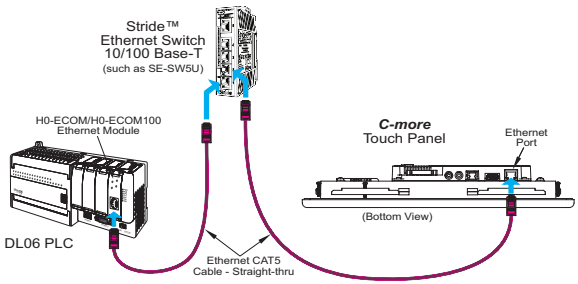

Test Menu – PLC Enquiry Test: Ethernet Connection

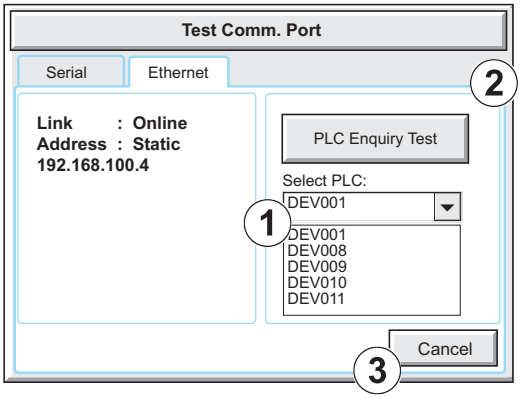

This function allows the ability to select any PLC configured in the project that may be connected to the touch panel through an Ethernet port connection and checks to see if the communications are working correctly.

Note: *The communications protocol for the PLC being selected must be configured the same as the* ***C-more*** *touch panel. The touch panel's PLC serial communications are configured using the* ***C-more*** *Programming Software's Panel Manager.*

Item No.	Function	Description	Comments
1	**Select PLC**	Select any PLC that is shown in the drop down menu.	
2	**PLC Enquiry Test**	The following are the steps that the **Ethernet PLC Enquiry Test** performs: 1.) Ping the network 4 times for the PLC selected. 2.) Four of the test read packets are sent to the selected PLC. Test result will be either Pass or Fail. However, if the result of pinging the network shows an error, the test is stopped.	
3	**Cancel**	Press to return to the **Test Menu** screen.	

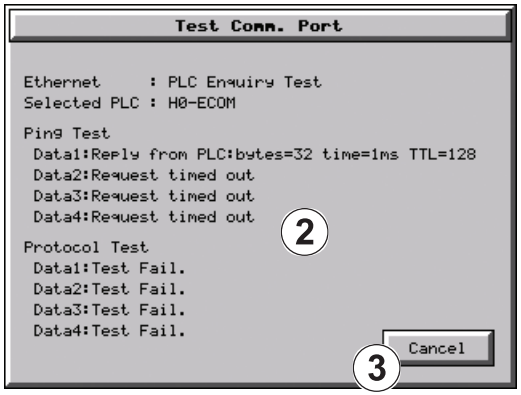

Test Menu – Test Beep/Sound

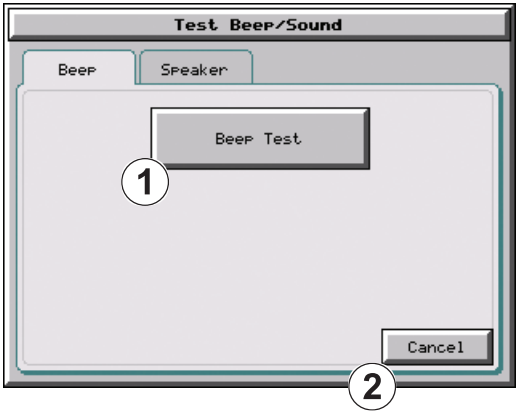

Item No.	Function	Description	Comments
1	**Beep Test**	The internal Beeper can be tested from this system setup screen whether the Beeper is enabled or disabled. After the **Beep Test** button is pressed then released, the Beeper will sound for 500 msec.	
2	**Cancel**	Press to return to the **Test Menu** screen.	

Test Menu – Test Beep/Sound (cont'd)

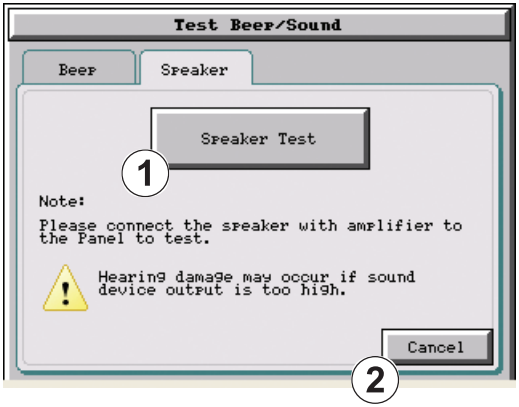

WARNING: Hearing damage may occur if the volume on the user supplied external amplified speaker is set too high.

Item No.	Function	Description	Comments
1	**Speaker Test**	The **Speaker Test** function requires that a speaker(s) with an amplifier (can be stereo) be connected to the Audio Line Out stereo jack on the rear of the touch panel. After the **Speaker Test** button is pressed then released, a system provided Test.WAV file will play once.	
2	**Cancel**	Press to return to the **Test Menu** screen.	

Memory Menu

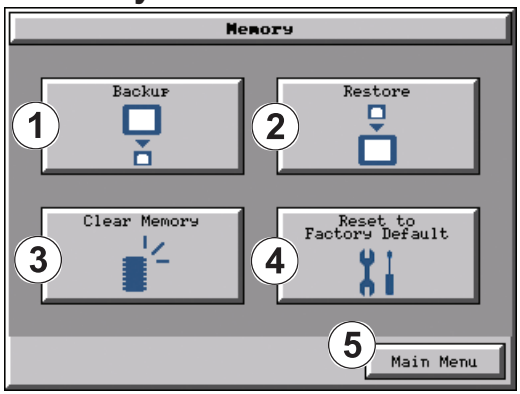

The user's project, system, log and recipes files can be backed up and restored to either a CompactFlash memory card (CF1 or CF2), or a USB memory device. From this menu the user can also clear the project log files. The user also has the ability to clear the memory within the *C-more* touch panel.

Base featured models (-R) do not include CF1 or CF2.

5

Item No.	Function	Description	Comments
1	**Backup**	Backup project, system, log & recipe files to the following memory devices: USB port - Type A: USB pen drive CF Slot #1 (standard port): CompactFlash CF Slot #2 (optional port): CompactFlash See page 5-37 for details.	Any USB 1.1 pen drive or CompactFlash memory device capacity available is supported. The backup data files are created and copied to a folder on the memory device named "EA_Memory_Copy." The project file is named StartupStorage.eas "Log" and "Recipe" folders with the appropriate data files are also created on the memory device.
2	**Restore**	Restore project, system, log & recipe files to the internal memory from one of the following memory devices: USB port - Type A: USB pen drive CF Slot #1 (standard port): CompactFlash CF Slot #2 (optional port): CompactFlash See page 5-44 for details.	A folder on the memory device named "EA_Memory_Copy" must exist containing a file named "StartupStorage.eas". The project data file is stored in this file, and if the system data file was backed up, it also will be stored in this file. Any backed up log or recipe data files will be located under the appropriate "Log" or "Recipe" folders.
3	**Clear Memory**	Clear selected data files from the memory of the following internal memory or external memory devices: Built-in FLASH Memory USB port - Type A: USB pen drive CF Slot #1 (standard port): CompactFlash CF Slot #2 (optional port): CompactFlash See page 5-50 for details.	Can only clear project, log and recipe data files of the Built-in FLASH memory. Can clear entire contents or individual data files of external memory devices.
4	**Reset to Factory Default**	The touch panel's internal memory is set to the original factory defaults.	Clears all project memory.
5	**Main Menu**	Press to return to the **Main Menu** screen.	

Project Executed from CompactFlash (CF Slot #1)

If a CompactFlash card is located in the CF1 slot at the time a project is transferred to the panel, the project will be stored on the CompactFlash card, not in the internal Built-in FLASH memory.

If CF1 slot contains a CompactFlash with a project and:

1.) The touch panel's power is cycled, then

2.) The project file stored on the CompactFlash is loaded into the touch panel's internal DRAM memory and executed. Please note that the project stored in the panel's internal FLASH memory is NOT loaded into the internal DRAM memory when a CompactFlash memory card is present. Any project in the internal FLASH memory is cleared.

WARNING: During power up with a CompactFlash plugged into the CF1 Slot, please do not remove the memory card from the slot. Damage to the CompactFlash and possibly the touch panel may result.

WARNING: After a firmware update, the project files which are located in either the touch panel's internal FLASH memory or the CompactFlash plugged into CF1 Slot are cleared. The programming software will need to be used to Transfer the project file back into the panel. If you wish to retain the project on the CompactFlash, power down the panel and remove the CompactFlash before performing a firmware upgrade.

Increasing Project Memory Size using a CompactFlash in CF1 Slot:

If a project is transferred to the panel with a CompactFlash card in CF1 Slot, the Font and Recipe data files are not included in the 10MB (40MB for 12" and 15" models) project size. Therefore using CF1 can allow a project to be loaded that is larger than 10MB if the excessive size is caused by Fonts and/or Recipe Sheets.

Memory – Backup

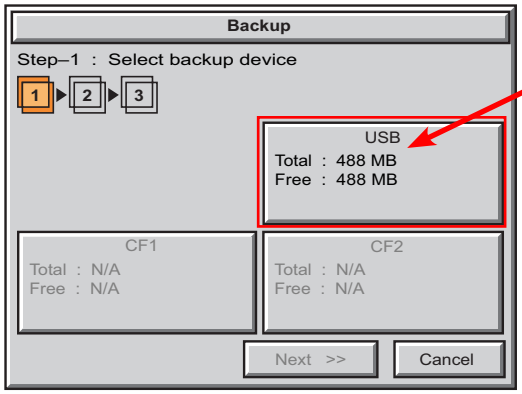

The **Memory - Backup** selection allows you to backup the panel's **Project**, **Log** files, **Recipe** files or even the **System** (firmware & OS) files to either a CompactFlash (**CF**) or **USB** pen drive. The available memory devices will be displayed showing the total and free available memory for that device. If the device is not available, it will be grayed out. The **Next** button is grayed out until a device is selected.

The **Cancel** button can be pressed at any time to return to the **Memory Menu** screen.

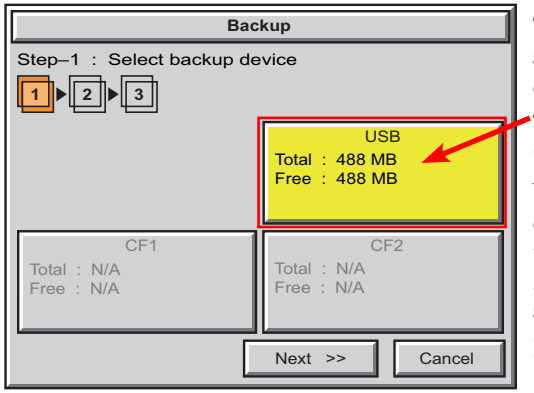

This is an example of a USB memory device selected to be used for backing up the panel's data file(s).

The selected device is highlighted. Pressing again un-selects it.

When there are more than two available backup devices, the one selected will be highlighted. If there is only one available memory device, it still needs to be highlighted in order to go to the next step.

Press the **Next** button to continue to Step 2.

Note: *If you have a memory device inserted into the proper port on the touch panel, but it doesn't show up as highlighted in Step 1 of the* ***Backup*** *setup screen, then try a different device to determine if the memory device is defective or if there is a possible problem with the memory device connection. It may not be compatible with the panel. This rarely happens with CF memory, but some USB pen drives are not USB 1.1 compatible and will not work with* ***C-more*** *touch panels. Also, some USB pen drives may take several minutes before they are recognized by the panel.*

Please read the explanation for the availability of CF1 under different conditions as shown on the next two pages.

Memory – Backup (cont'd)

CF1 Availability Explanation:

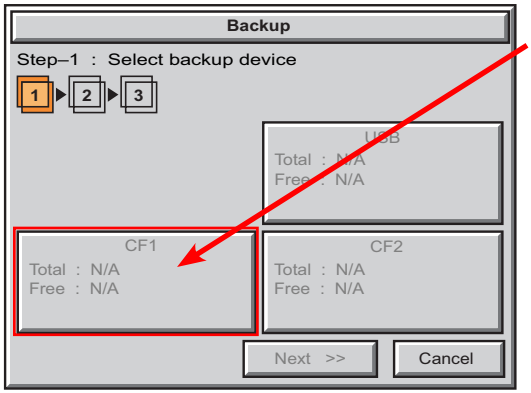

If there is no CompactFlash inserted into CF1 Slot, then the CF1 button's Total and Free memory will show as N/A and be grayed out.

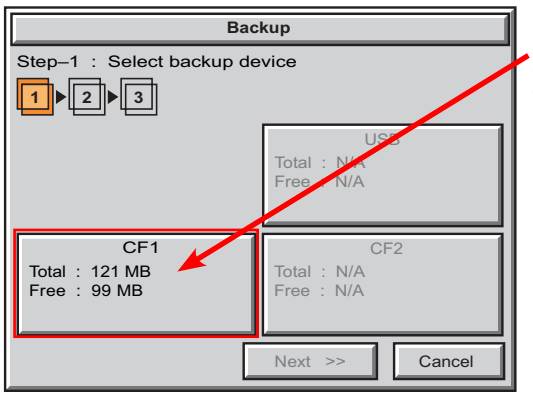

If the panel is powered up or rebooted with a CompactFlash inserted into CF1 Slot, then the CF1 button's Total and Free memory will be displayed.

Memory – Backup (cont'd)

CF1 Availability Explanation (cont'd):

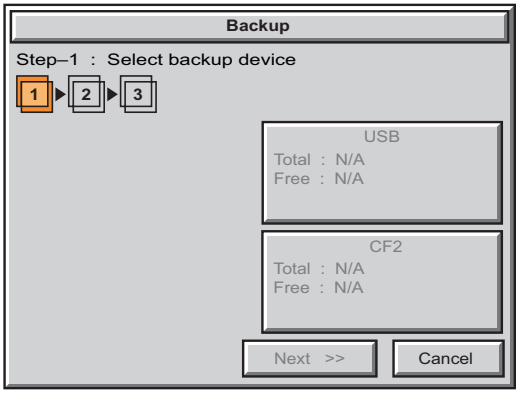

If a CompactFlash is inserted into CF1 Slot and a project is transferred using the *C-more* Programming Software's **Project Transfer** utility **Panel > Transfer**, then the CF1 will not show up in the **Memory - Backup** Step 1 device choices. The CompactFlash will have the runtime files stored on it that get loaded into the touch panel's internal DRAM memory when powered up or rebooted.

5

Below is an example of the folder and file structure that is stored on the CompactFlash in the CF1 Slot for a project that was directly transferred from the *C-more* **Programming Software's Project Transfer** function when viewed in Windows® Explorer on a PC.

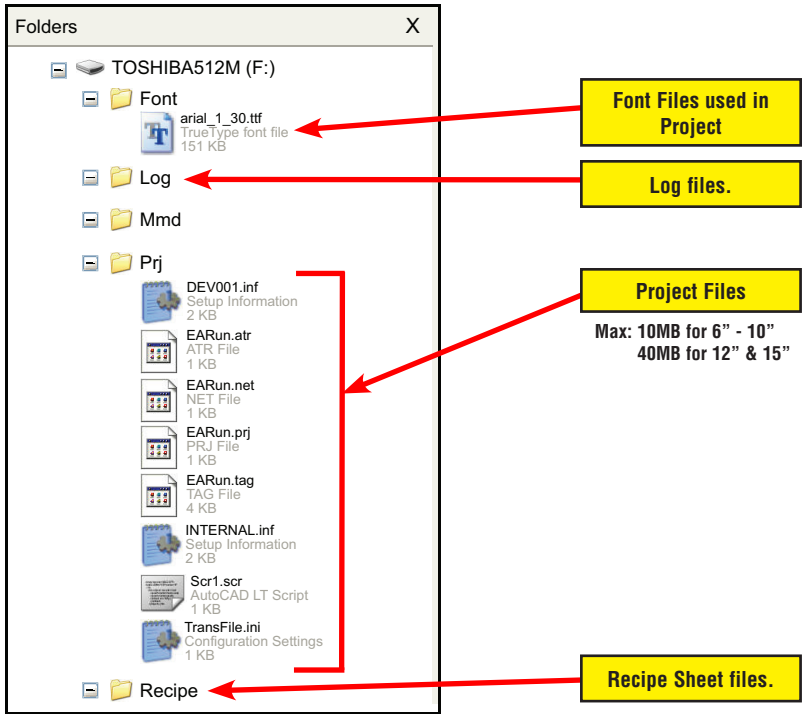

Memory – Backup (cont'd)

Note: *The following definitions are for the various file types that can be backed up:*
Project data *– consists of the actual developed project data that is created in the* ***C-more*** *programming software and includes all functionality, objects, screens, tag names, labels, comments, graphics, etc. Included in backup file name StartupStorage.eas.*
Recipe data – *consists of all the data values and labels that have been created for the various recipe sheets. Includes all recipe sheets loaded to the panel. Only recipe sheets used in the project are loaded to the panel.*
System data *– consists of the operating system, firmware and run time files. Included in backup file name StartupStorage.eas.*
Log data *– consists of the Alarm Log, Message Log and Trend Data Logging files.*

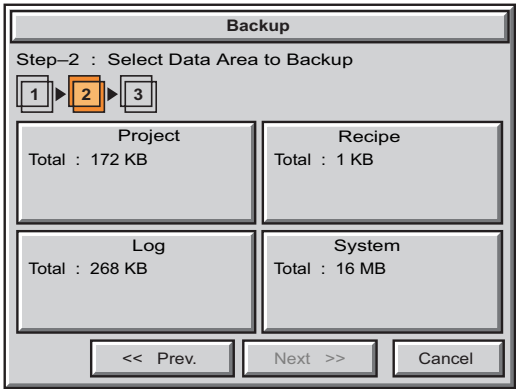

Select the data file(s) to be backed up by pressing the appropriate data file button. The selection will be highlighted.

Pressing the highlighted data file button again will turn it off.

The **Next >>** button will stay grayed out until at least one data file is selected.

Any file type not available will be grayed out.

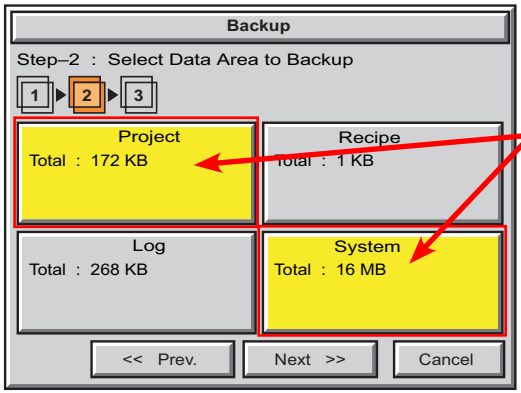

This is an example of data files selected for backing up.

The selected data files are highlighted.

The **Next >>** button is now enabled.

Pressing **Cancel** will return to the previous menu.

Press the **Next** button to continue.

Note: *In the case of the* ***Project*** *and* ***System*** *files, these can be* ***Restored*** *later to another panel.*
In the case of the ***Recipe*** *files, they can be edited externally from the panel and then* ***Restored*** *to the panel.*
The ***Log*** *files are for viewing purposes only.*
See Page 5-44 for instructions on Restoring the Project, System and or Recipe files to a Panel.

Memory – Backup (cont'd)

Backup Data Files Naming and Organization

The following graphic shows how the various data files are organized on the memory device when doing a **Backup** and also the file naming convention that is used when viewed in Windows® Explorer on a PC.

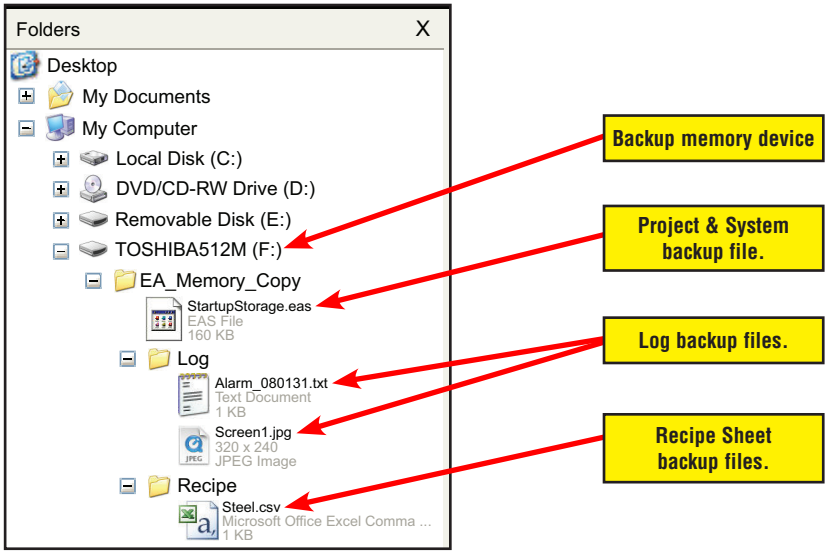

Memory – Backup (cont'd)

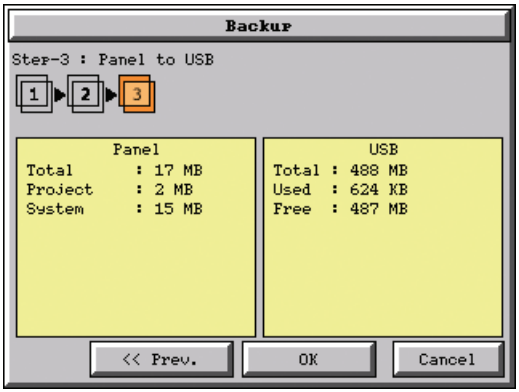

The next system setup screen allows the verification of the data file selections. When the **OK** button is pressed, the backup begins.

The user can return to the previous screen by pressing the **<< Prev** button.

This message is displayed during the **Backup** copying process. Press the **Cancel** button to abort the backup.

The following text is shown in the copying progress message box:

Copy to USB Memory:
"Please do not Power Off or Remove USB"

Copy to CF1 or CF2:
"Please do not Power Off or Remove CF"

WARNING: During the copying process, Do not power off the touch panel or remove the memory device.

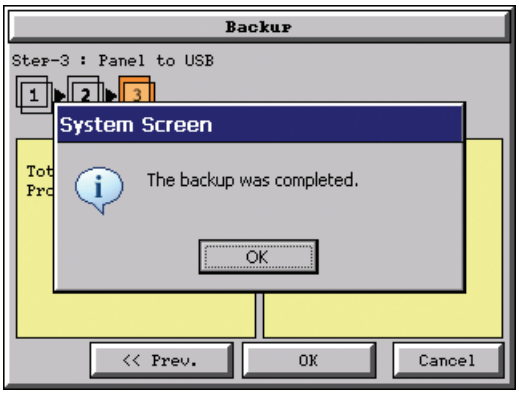

This message is displayed to indicate the **Backup** is complete. Press the **OK** button to return to the previous menu selection.

Memory – Backup (cont'd)

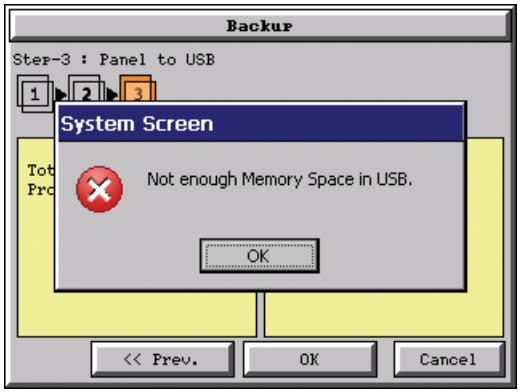

Warning Messages

If the destination does not have enough space to store the selected memory size, then the message shown here will be displayed. Press the **OK** button to clear the warning message.

The warning message will read "Not enough Memory Space in %Device%".

%Device% will show either "CF1", "CF2", or "USB".

This warning message will be displayed if the backup Memory device fails or is removed during the backup. Press the **OK** button to clear the warning message.

The warning message will read "Backup Failed. "%Device% cannot be found".

%Device% will show either "CF1", "CF2", or "USB".

Refer to **Chapter 8: Troubleshooting** for additional help.

For any other reason the backup fails, then this warning message will be displayed. Press the **OK** button to clear the warning message.

The warning message will read "Backup Failed".

Refer to **Chapter 8: Troubleshooting** for additional help.

Memory – Restore

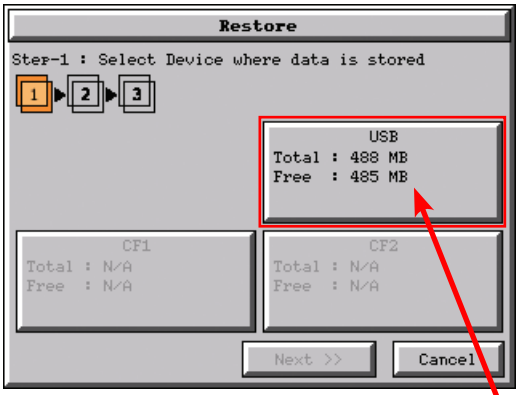

The **Memory - Restore** function is used to:

1.) **Restore** a project previously backed up on a CompactFlash card or USB pen drive memory device to the same panel. See **Memory - Backup** on page 5-37.

2.) Copy a project from one panel to another panel using a memory device to physically transport the data files.

3.) **Restore** a project into the panel that was transfered to an "External Memory Device" using the *C-more* Programming Software.

4.) **Restore Recipe Sheet(s)** previously backed up to a memory device or copied to the memory device using a PC.

The available memory devices will be displayed showing the total and free available memory for that device. If the device is not available, it will be grayed out. The **Next** button is grayed out until a device is selected.

The **Cancel** button can be pressed at any time to return to the **Memory Menu** screen.

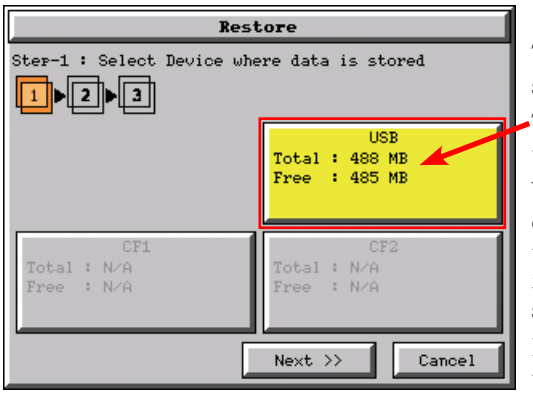

This is an example of a USB memory device selected to be used for restoring the data file(s).

The selected device is highlighted. Pressing again unselects it.

When there are more than two available restore devices, the one selected will be highlighted. If there is only one available memory device, it needs to be highlighted in order to go to the next step.

Press the **Next** button to continue to continue to Step 2.

Note: *If you have a memory device inserted into the proper port on the touch panel, but it doesn't show up as highlighted in Step 1 of the* ***Restore*** *setup screen, then try a different device to determine if the memory device is defective or if there is a possible problem with the memory device connection. It may not be compatible with the panel. This rarely happens with CF mamory, but some USB pen drives are not USB 1.1 compatible and will not work with* ***C-more*** *touch panels. Also, some USB pen drives may take several minutes before they are recognized by the panel.*

Memory – Restore (cont'd)

Please read the explanation for the availability of CF1 under different conditions as shown on this page and the next.

CF1 Availability Explanation:

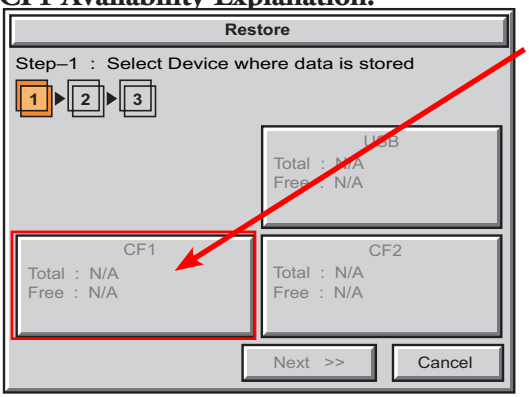

If there is no CompactFlash inserted into CF1 Slot, then the CF1 button's Total and Free memory will show as N/A and be grayed out.

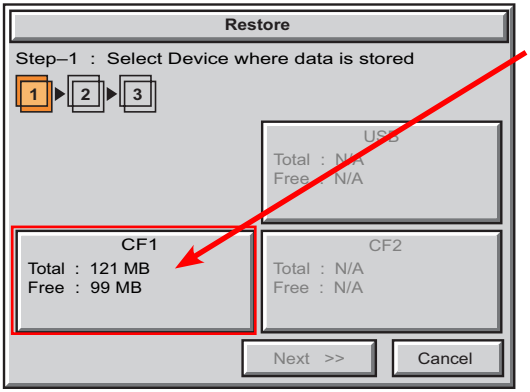

If the panel is powered up or rebooted with a CompactFlash inserted into CF1 Slot, then the CF1 button's Total and Free memory will be displayed.

Memory – Restore (cont'd)

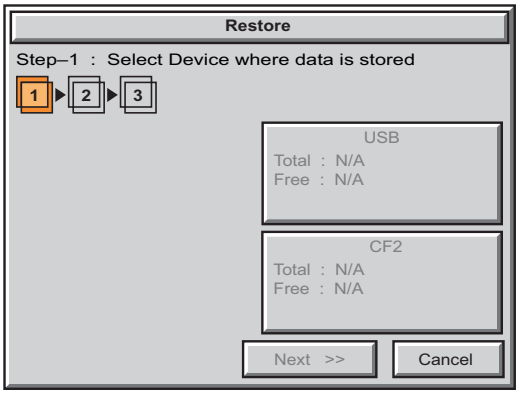

CF1 Availability Explanation (cont'd):

If a CompactFlash is inserted into CF1 Slot and a project is transferred using the *C-more* Programming Software's **Project Transfer** utility **Panel > Transfer**, then the CF1 will not show up in the **Memory - Backup** Step 1 device choices. The CompactFlash will have the runtime files stored on it that get loaded into the touch panel's internal DRAM memory when powered up or rebooted.

See page 5-39 for an example of the folder and file structure that is stored on CF1.

Note: *The following definitions are for the various file types that can be backed up:*
Project data *– consists of the actual developed project data that is created in the* ***C-more*** *programming software and includes all functionality, objects, screens, tag names, labels, comments, graphics, etc. Included in backup file name StartupStorage.eas.*
Recipe data – *consists of all the data values and labels that have been created for the various recipe sheets. Includes all recipe sheets loaded to the panel. Only recipe sheets used in the project are loaded to the panel.*
System data *– consists of the operating system, firmware and run time files. Included in backup file name StartupStorage.eas.*
Log data *– consists of the Alarm Log, Message Log and Trend Data Logging files.*

Memory – Restore (cont'd)

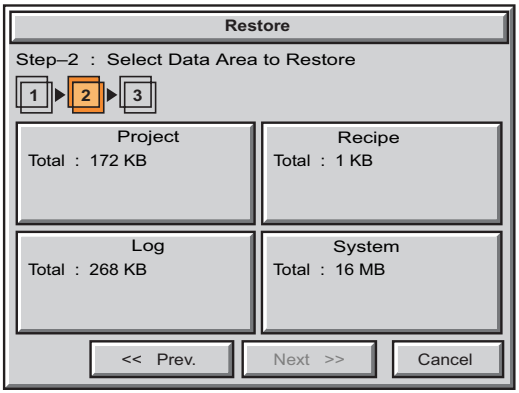

Select the data file(s) to be restored by pressing the appropriate data file button. The selection will be highlighted. The data file can be either the **Project**, **System** and/or **Recipe** files. The selected data is restored to the internal built-in FLASH memory if there is no CompactFlash memory card inserted into the CF1 slot.

Pressing the highlighted data file again will turn it off.

The **Next >>** button will stay grayed out until at least one data file is selected.

Any file type not available will be grayed out.

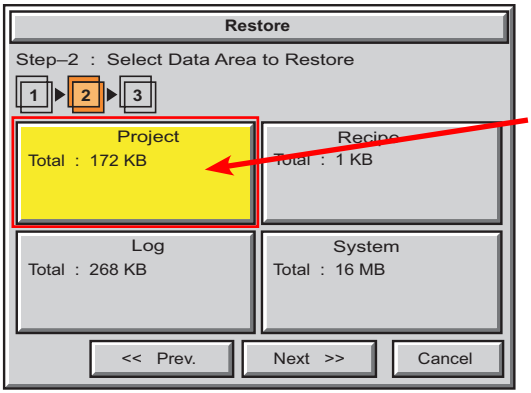

This is an example of a file selected to restore.

The selected file is highlighted.

The **Next >>** button is now enabled.

Pressing **Cancel** will return to the previous menu.

Note: *The following definitions are for the various file types that can be backed up:*
Project data *– consists of the actual developed project data that is created in the* ***C-more*** *programming software and includes all functionality, objects, screens, tag names, labels, comments, graphics, etc. Included in backup file name StartupStorage.eas.*
Recipe data – *consists of all the data values and labels that have been created for the various recipe sheets. Includes all recipe sheets loaded to the panel. Only recipe sheets used in the project are loaded to the panel.*
System data *– consists of the operating system, firmware and run time files. Included in backup file name StartupStorage.eas.*
Log data *– consists of the Alarm Log, Message Log and Trend Data Logging files.*

Press the **Next** button to continue.

Memory – Restore (cont'd)

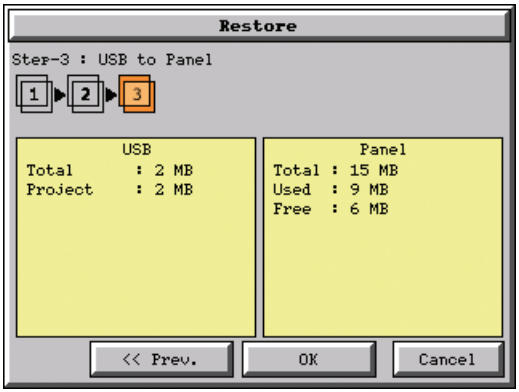

The data selected to restore is checked. If the data is good, then the **OK** button can be pressed to start the restore.

If there is a problem with the data, the **OK** button will remain grayed out and the user can return to the previous screen by pressing the << Prev button.

The problem could be caused by a corrupted data file. See **Chapter 8: Troubleshooting** for additional help.

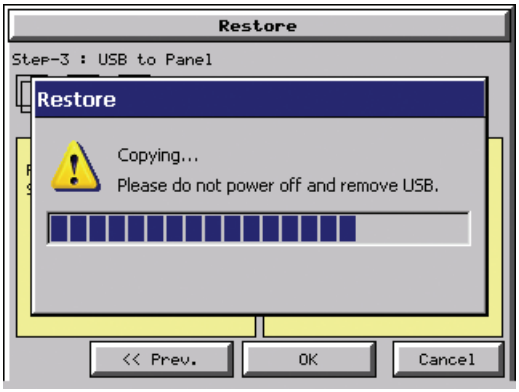

This message is displayed during the **Restore** process. Press the **Cancel** button to abort the backup.

The following text is shown in the copying progress message box:

Copy to USB Memory:
"Please do not Power Off or Remove USB"

Copy to CF1 or CF2:
"Please do not Power Off or Remove CF"

WARNING: During the copying process, Do not power off the touch panel or remove the memory device.

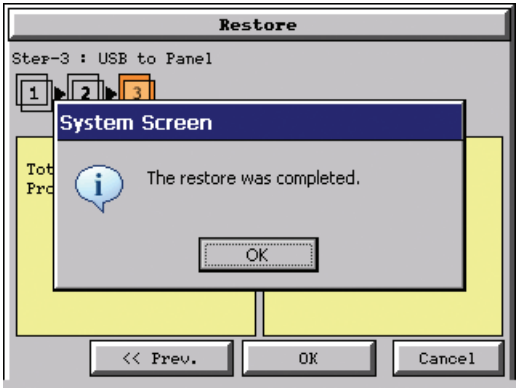

This message is displayed to indicate the **Restore** is complete. Press the **OK** button to return to the previous menu selection.

Memory – Restore (cont'd)

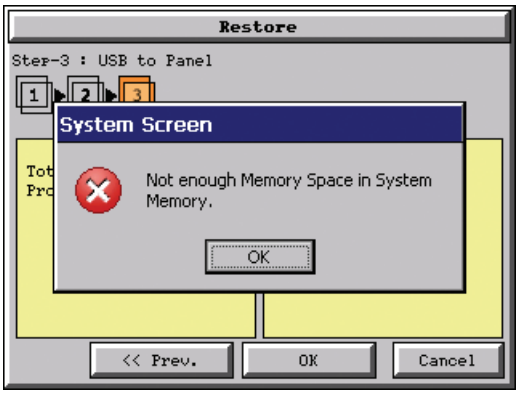

Warning Messages:

If the system memory does not have enough space to restore the selected memory size, then the message shown here will be displayed. Press the **OK** button to clear the warning message.

The warning message will read "Not enough Memory Space in System Memory".

The Project size must be less than 10 MByte for 6"-10" panels and less than 40 MByte for 12" & 15" panels.

This warning message will be displayed if the restore Memory device fails or is removed during the backup. Press the **OK** button to clear the warning message.

The warning message will read "Restore Failed. "%Device% cannot be found".

%Device% will show show "CF1", "CF2", or "USB".

Try using a different device with known good data in the same connector or using the device that is causing the error in a different connector.

For any other reason the restore fails, then this warning message will be displayed. Press the **OK** button to clear the warning message.

Memory – Clear Memory

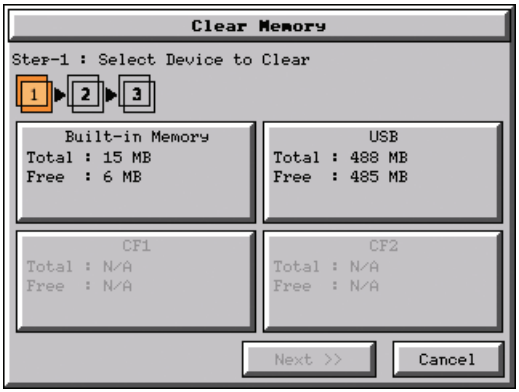

This function is used to clear individually selected data files, or all data files, within the panel's **Built-in Memory**, or any installed memory device such as a USB pen drive, CompactFlash (CF1 or CF2).

Select the memory device to clear. If the device is not available, it will be grayed out.

The **Next** button is grayed out until a device is selected.

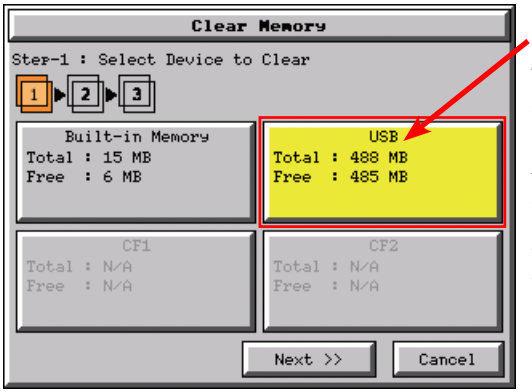

The selected device is highlighted. Pressing again un-selects it.

When there are more than two available backup devices, the one selected will be highlighted. If another is selected, then the highlight will change to the last one pressed. Only one device can be selected at a time.

Press the **Next** button to continue.

Memory – Clear Memory (cont'd)

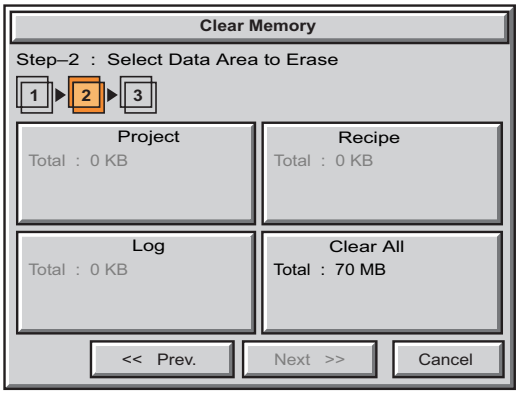

Select the data file(s) to be cleared.

This is an example of CF1, CF2 or USB memory that was selected in **Clear Memory - Step-1**.

The selected file will be highlighted. Pressing again un-selects it.

The **Next >>** button will stay grayed out until file(s) are selected.

Selecting **Clear All** will erase all files located on the memory device.

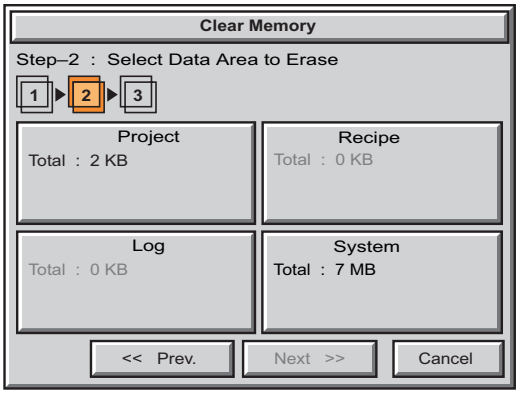

This is an example of **Built-in Memory** that was selected in **Clear Memory - Step-1**.

Notice the ability to select either the **Project** file, **Log** files, **Recipe** files, or the **System** files.

Note: *System files can not be cleared from the internal memory.*

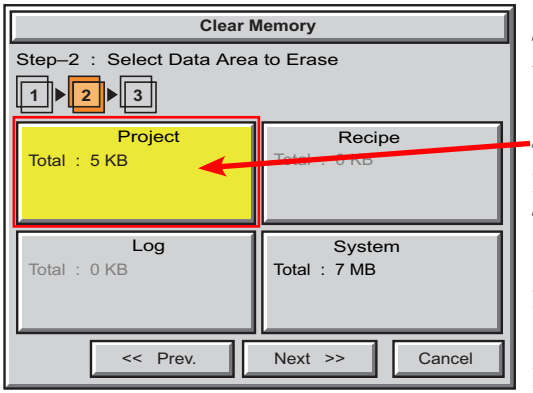

This is an example of the **Project** data file being selected for clearing.

The selected memory area is highlighted. Pressing again un-selects it.

The **Next >>** button is now enabled.

Pressing **Cancel** will un-select the file(s).

Press the **Next** button to continue.

Memory – Clear Memory (cont'd)

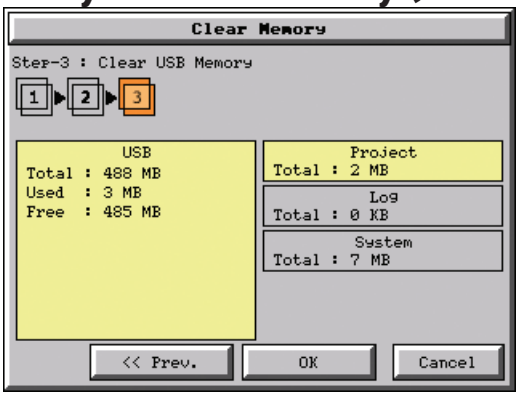

The data file(s)selected to clear are checked. If the data file is good, then the **OK** button can be pressed to start the clear procedure.

If there is a problem with the data file, the **OK** button will remain grayed out and the user can return to the previous screen by pressing the **<< Prev** button.

Press the **OK** button to continue.

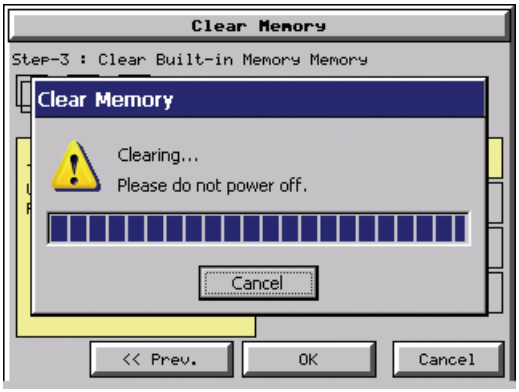

This message is displayed during the clearing process. Press the **Cancel** button to abort the clearing.

The following text is shown in the clearing progress message box:

Clearing Built-in Memory:
"Please do not Power Off"

Clearing USB Memory:
"Please do not Power Off or Remove USB"

Clearing CF1 or CF2

"Please do not Power Off or Remove CF"

WARNING: During the clearing process, do not power off the touch panel or remove the memory device.

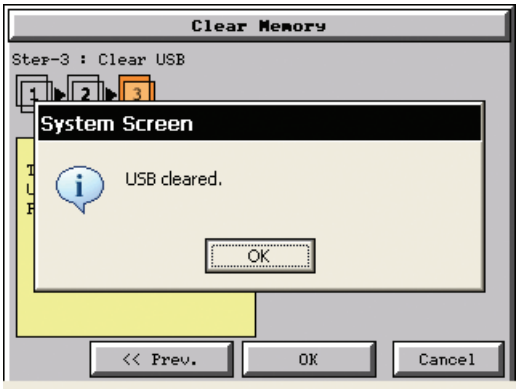

The following message is displayed when the clearing process is complete:

"%Device% cleared"

%Device% will show either "CF1", "CF2", or "USB".

Press the **OK** button to return to the **Memory Menu** screen.

Memory – Clear Memory (cont'd)

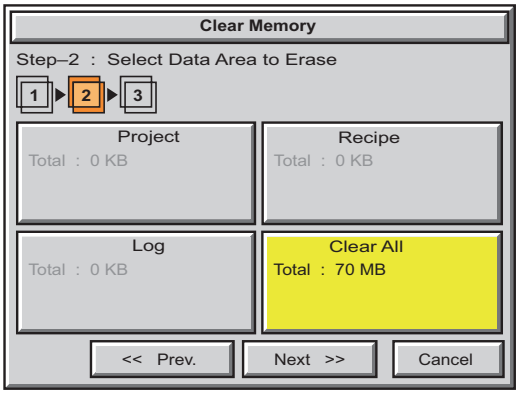

The following is an example of **Clear All** selected for clearing.

The selected device is highlighted.

The **Next >>** button is now enabled.

Pressing **Cancel** will un-select the **Clear All**.

Note: *If* ***Clear All*** *is selected, all files will be erased from the memory device, even those not related to the* ***C-more*** *touch panel.*

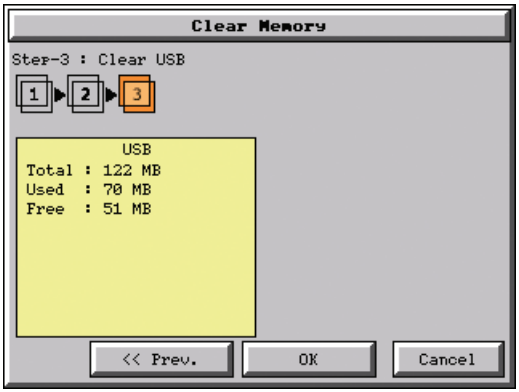

The data file(s)selected to clear are checked. If the data file is good, then the **OK** button can be pressed to start the clear procedure.

If there is a problem with the data file, the **OK** button will remain grayed out and the user can return to the previous screen by pressing the **<< Prev** button.

Press the **OK** button to continue.

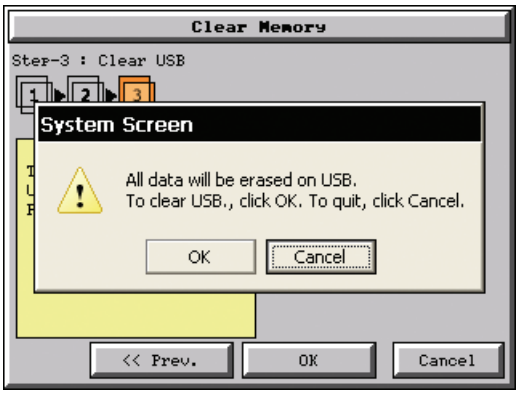

The warning message shown here will be displayed to give the user the opportunity to decide if they want to proceed or not.

Press the **OK** button to continue.

The **Clear All** process will start with a warning message as seen in the first example and continue until a message saying the device is cleared or a warning message as shown on the next page will appear.

Memory – Clear Memory (cont'd)

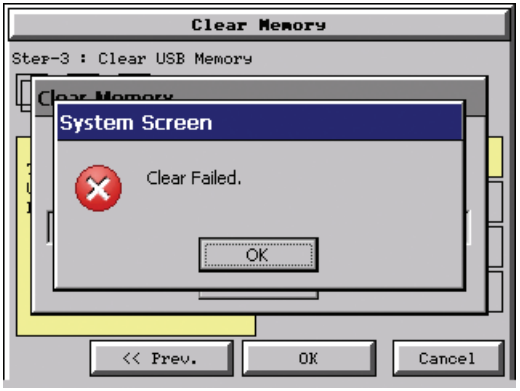

The warning message shown here will be displayed if the clearing process fails.

"Clear Failed".

Press the **OK** button to return to the **Clear Memory** screen and try again.

If the selected memory still fails to clear, then refer to **Chapter 8: Troubleshooting** for additional help.

Memory – Reset to Factory Default

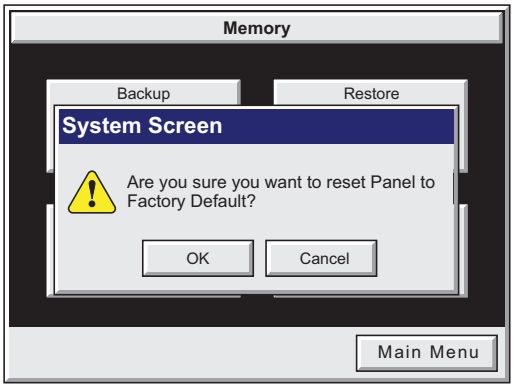

After pressing the **Reset to Factory Default** button from the **Memory Menu**, the message box shown will be displayed.

Resetting to the Factory Defaults produces the following actions:

1.) The touch screen calibration is reset to the Factory Defaults.

2.) The project file is cleared.

3.) The log, recipe & WAV files are cleared.

4.) The IP address is set to DHCP.

5

WARNING: Please make a backup file to either a CF or USB memory device using the Memory Backup function before resetting to the Factory Defaults as a precautionary measure.

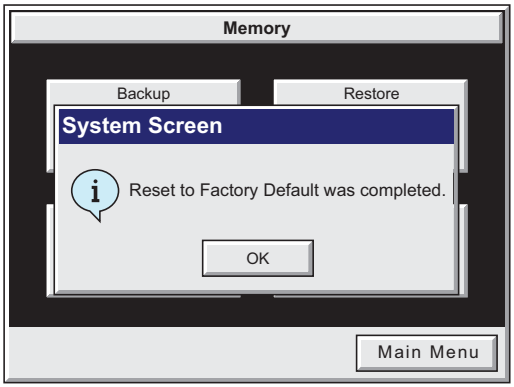

The message shown here is displayed once the **Factory Default** values have been stored into the system memory.

Press **OK** to continue.

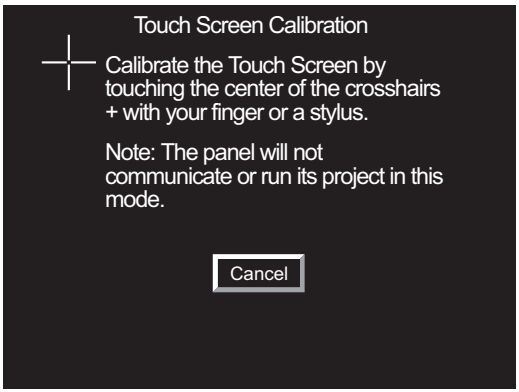

After pressing **OK**, the touch panel will reboot and startup on the **Touch Screen Calibration** procedure as shown here.

The following **note** is also shown on the calibration screens to remind the user that the **Project File** has been cleared, there's no communications with the PLC, and the calibration procedure most be performed in order to ready the panel to download a project:

Note: The panel will not communicate or run its project in this mode.

Also, the ***C-more* Programming Software** will not connect to the panel in this situation.

PLC COMMUNICATIONS

In This Chapter...

Introduction **6–2**

DirectLOGIC PLCs Password Protection **6–2**

PLC Communication Cables & Wiring Diagrams **6–5**

AutomationDirect PLCs RS-232C Serial: 6–7
AutomationDirect PLCs RS-422A/RS-485A: 6–10
Direct LOGIC Universal Isolated Network Adapter, p/n FA-ISOCON: 6–16
Direct LOGIC Universal Converter, p/n F2-UNICON: 6–17
RS-422A/RS-485A Multi-Drop Wiring Diagram Examples 6–18
Allen-Bradley: 6–22
GE: 6–27
GE VersaMax Micro: 6–27
Mitsubishi: 6–27
Omron: 6–29
Modicon ModBus RS-232: 6–30
Modicon Micro Series: 6–30
Modicon ModBus with RJ45: 6–30
Siemens: 6–31

Introduction

The *C-more* family of touch panels is capable of communicating with a wide variety of Programmable Logic Controllers. *C-more* is capable of communicating over RS232, RS422 and RS485 serial networks as well as Ethernet networks. It communicates with all AutomationDirect PLC's utilizing various protocols. *C-more* also communicates with other brands of PLCs by their different protocols. The table on the next page lists all of the various PLCs and protocols that can be configured. The page after the protocol table lists the various serial communication cables that are available to purchase. The rest of this chapter is devoted to show the pin to pin connections of all the available cables plus wiring diagrams that the user can refer to in order to construct their own cables, along with wiring diagrams of cables that are not available for purchase. To simplify RS422/RS485 wiring schemes, we have included wiring diagrams showing connections for available terminal connectors such as our ZIPLink Communication Adapter Module, p/n ZL-CMA15, used for example with our DL-06 and D2-260 PLCs and *C-more* D-Sub 15-pin to Terminal Block Adapter p/n EA-COMCON-3.

If you have difficulty determining whether the particular PLC and/or protocol you are using will work with the *C-more* series of touch panels, please contact our technical support group at 770-844-4200

*Direct*LOGIC PLCs Password Protection

NOTE: *Many* ***Direct****Logic PLCs support multi-level password protection of the ladder program. This allows password protection while not locking the communication port to an operator interface. The multilevel password can be invoked by creating a password with an upper case "A" followed by seven numeric characters (e.g. A1234567). Please refer to the specific PLC user manual for further details.*

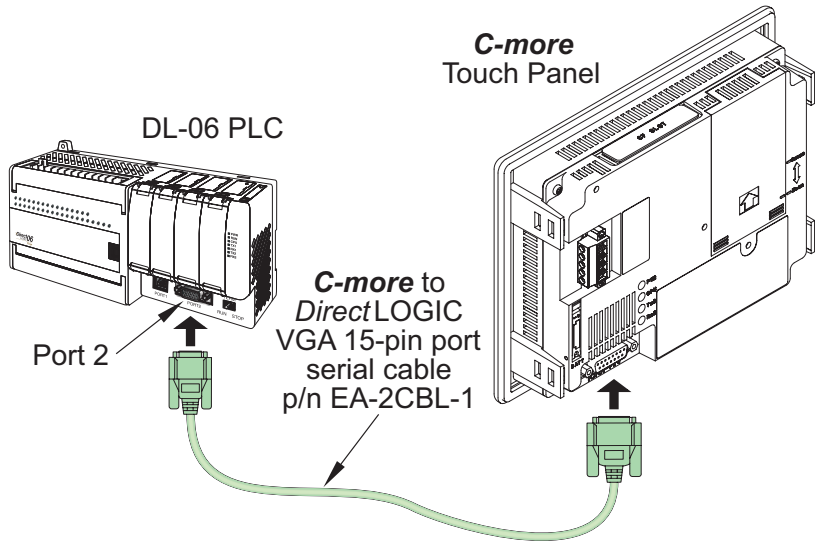

PLC Protocol & Cables

Compatibility Table			
Model			**Protocols**
AutomationDirect	Productivity3000		P3000 Serial
			P3000 Ethernet
	CLICK		Modbus (CLICK)
	DL05/DL06	all	K-Sequence
			DirectNET
			Modbus (Koyo addressing)
		H0-ECOM/H0-ECOM100	***Direct***LOGIC Ethernet
	DL105	all	K-Sequence
	DL205	D2-230	K-Sequence
		D2-240	K-Sequence
			DirectNET
		D2-250/D2-250-1/D2-260	K-Sequence
			DirectNET
			Modbus (Koyo addressing)
		D2-240/D2-250-1/D2-260 Using DCM	***Direct***NET
			Modbus (Koyo addressing)
		H2-ECOM/H2-ECOM100	***Direct***LOGIC Ethernet
	DL305	D3-330/330P (Requires the use of a Data Communications Unit)	***Direct***NET
		D3-340	***Direct***NET
		D3-350	K-Sequence
			DirectNET
			Modbus (Koyo addressing)
		D3-350 DCM	***Direct***NET
			Modbus (Koyo addressing)
	DL405	D4-430	K-Sequence
			DirectNET
		D4-440	K-Sequence
			DirectNET
		D4-450	K-Sequence
			DirectNET
			Modbus (Koyo addressing)
		All with DCM	***Direct***NET
			Modbus (Koyo addressing)
		H4-ECOM/H4-ECOM100	***Direct***LOGIC Ethernet
	H2-WinPLC (Think & Do) Live V5.2 or later and Studio any version		Think & Do Modbus RTU (serial port)
	H2-WinPLC (Think & Do) Live V5.5.1 or later and Studio V7.2.1 or later		Think & Do Modbus TCP/IP (Ethernet port)
	GS Drives		GS Drives Serial
			GS Drives TCP/IP (GS-EDRV)
	SOLO Temperature Controllers		SOLO Temperature Controller

PLC Compatibility Table continued on the next page.

PLC Protocol & Cables (cont'd)

Compatibility Table (cont'd)		
Model		**Protocols**
Allen-Bradley	MicroLogix 1000, 1100, 1200, 1400, 1500, SLC 5-01/02/03	DH485/AIC/AIC+
	MicroLogix 1000, 1100, 1200, 1400 and 1500	DF1 Half Duplex; DF1 Full Duplex
	SLC 5-03/04/05	
	ControlLogix™, CompactLogix™, FlexLogix™	
	PLC-5	DF1 Full Duplex
	ControlLogix, CompactLogix, FlexLogix - Tag Based	DF1 Half Duplex; DF1 Full Duplex
	ControlLogix, CompactLogix, FlexLogix - Generic I/O Messaging	EtherNet/IP Server
	ControlLogix, CompactLogix, FlexLogix - Tag Based	EtherNet/IP Client
	MicroLogix 1100, 1400 and SLC 5/05, via native Ethernet port	
	MicroLogix 1000, 1100, 1200, 1400, 1500, SLC 5-03/04/05, all via ENI adapter	
GE	90/30, 90/70. Micro 90, VersaMax Micro	SNPX
Mitsubishi	FX Series	FX Direct
	Q02, Q02H, Q06H, Q12H, Q25H	Q CPU
	Q, QnA Serial	QnA Serial
	Q, Qna Ethernet	QnA Ethernet
Modicon	984 CPU, Quantum 113 CPU, AEG Modicon Micro Series 110 CPU: 311-xx, 411-xx, 512-xx, 612-xx	Modbus RTU
	Other devices using Modicon Modbus addressing	Modbus RTU
		Modbus TCP/IP
Omron	C200 Adapter, C500	Host Link
	CJ1/CS1 Serial	FINS
	CJ1/CS1 Ethernet	
Siemens	S7-200 CPU, RS-485 Serial	PPI
	S7-200 CPU, S7-300 CPU, S7-1200 CPU; Ethernet	Ethernet ISO over TCP

PLC Communication Cables & Wiring Diagrams

Purchased Cable Description	Cable Part Number
AutomationDirect Productivity Series, CLICK, ***Direct***LOGIC PLC RJ-12 port, DL05, DL06, DL105, DL205, D3-350, D4-450 & H2-WINPLC (RS-232C)	**EA-2CBL**
DirectLOGIC (VGA Style) 15-pin port DL06, D2-250 (250-1), D2-260 (RS-232C)	**EA-2CBL-1**
DirectLOGIC PLC RJ-11 port, D3-340 (RS-232C)	**EA-3CBL**
DirectLOGIC DL405 PLC 15-pin D-sub port, DL405 (RS-232C)	**EA-4CBL-1**
DirectLOGIC PLC 25-pin D-sub port, DL405, D3-350, DL305 DCU and all DCM's (RS-232C)	**EA-4CBL-2**
Allen-Bradley MicroLogix 1000, 1100, 1200, 1400, 1500 (RS-232C)	**EA-MLOGIX-CBL**
Allen-Bradley SLC 5-03/04/05, ControlLogix, CompactLogix, FlexLogix, MicroLogix DF1 port (RS-232C)	**EA-SLC-232-CBL**
Allen-Bradley PLC-5 DF1 port (RS-232C)	**EA-PLC5-232-CBL**
Allen-Bradley MicroLogix, SLC 5-01/02/03, PLC5 DH485 port (RS-232C)	**EA-DH485-CBL**
GE 90/30, 90/70, Micro 90, VersaMax Micro 15-pin D-sub port (RS-422A)	**EA-90-30-CBL**
MITSUBISHI FX Series 25-pin port (RS-422A)	**EA-MITSU-CBL**
MITSUBISHI FX Series 8-pin mini-DIN (RS-422A)	**EA-MITSU-CBL-1**
OMRON Host Link C200 Adapter, C500 (RS-232C)	**EA-OMRON-CBL**

Part No. EA-2CBL

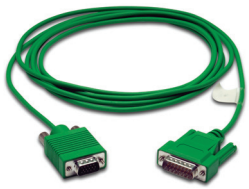

Part No. EA-2CBL-1

Part No. EA-3CBL

NOTE 1: *The above list of pre-made communications cables may be purchased. See further in this chapter for wiring diagrams of additonal* ***user constructed cables****. This chapter also includes wiring diagrams for the pre-made cables.*

NOTE 2: *EZTouch serial PLC communication cables are compatible with* ***C-more*** *touch panels.*

C-more PLC Serial Communications Port

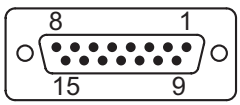

D-Sub 15-pin female on rear of touch panel

PLC Communication Cables & Wiring Diagrams

Part No. EA-4CBL-1

Part No. EA-4CBL-1

Part No. EA-MLOGIX-CBL

Part No. EA-SLC-232-CBL

Part No. EA-PLC5-232-CBL

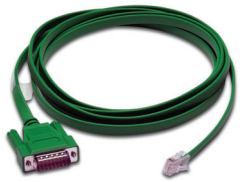

Part No. EA-DH485-CBL

Part No. EA-90-30-CBL

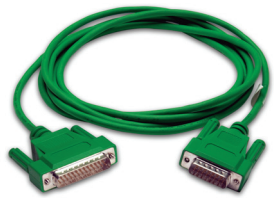

Part No. EA-MITSU-CBL

Part No. EA-MITSU-CBL-1

Part No. EA-OMRON-CBL

PLC Communication Cables & Wiring Diagrams (cont'd)

The following series of wiring diagrams show the connectors and wiring details for the communication cables that are used between the *C-more* touch panels and various PLC controllers. Part numbers are included with the **pre-made cables** that can be purchased from *AutomationDirect*. The information presented will allow the user to construct their own cables if so desired.

EA-2CBL

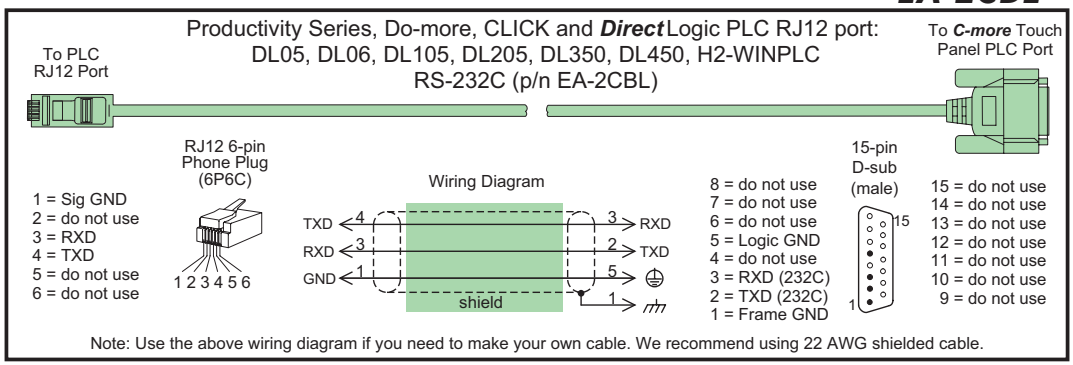

Note: Use the above wiring diagram if you need to make your own cable. We recommend using 22 AWG shielded cable.

AutomationDirect PLCs RS-232C Serial: EA-2CBL-1

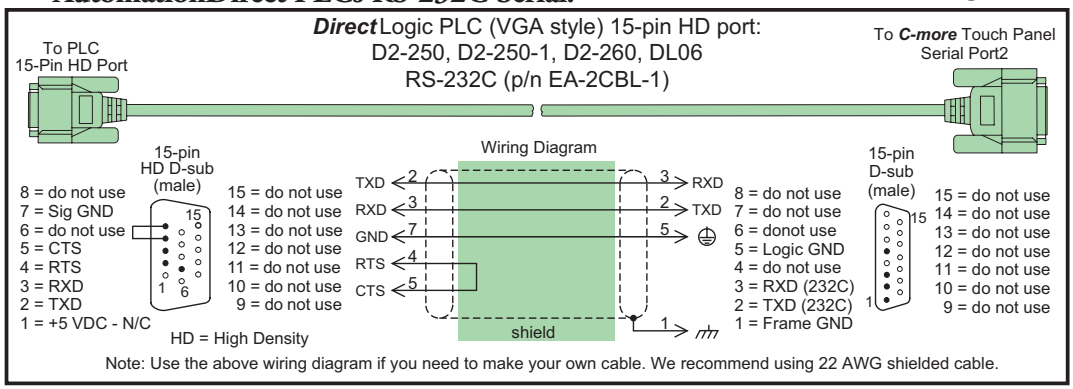

Note: Use the above wiring diagram if you need to make your own cable. We recommend using 22 AWG shielded cable.

AutomationDirect PLCs RS-232C Serial (cont'd):

EA-3CBL

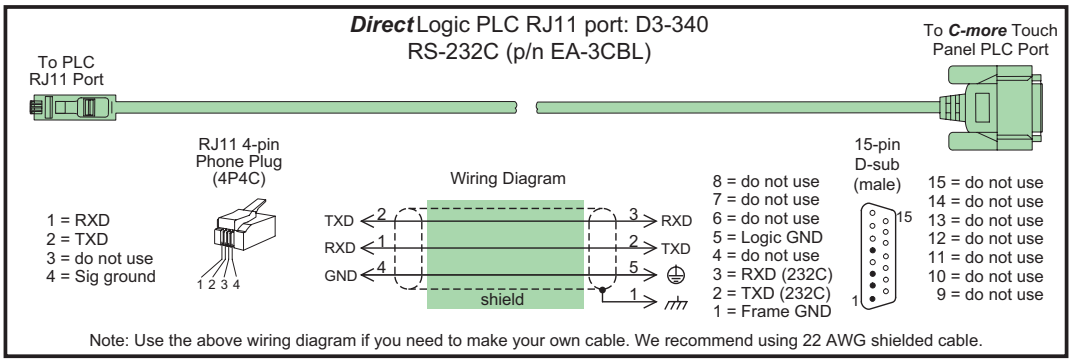

Note: Use the above wiring diagram if you need to make your own cable. We recommend using 22 AWG shielded cable.

AutomationDirect PLCs RS-232C Serial (cont'd):

EA-4CBL-1

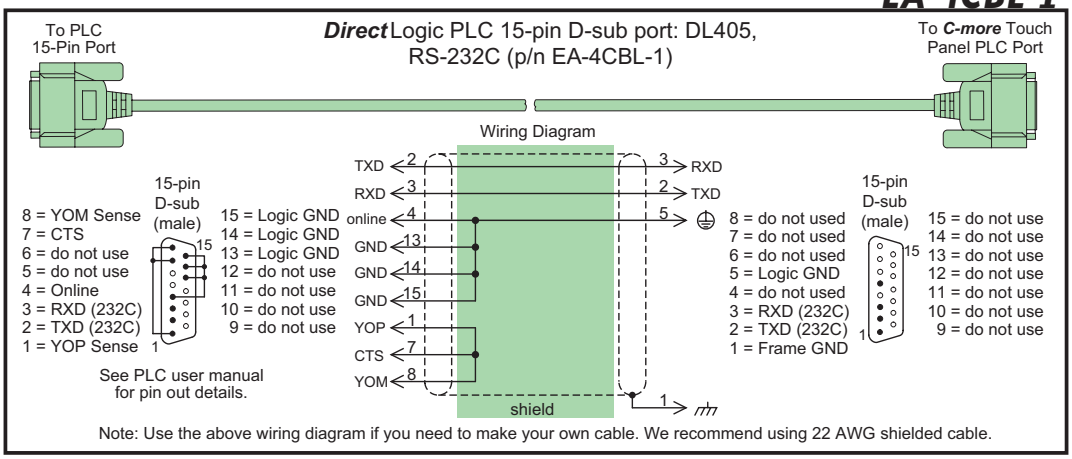

Note: Use the above wiring diagram if you need to make your own cable. We recommend using 22 AWG shielded cable.

EA-4CBL-2

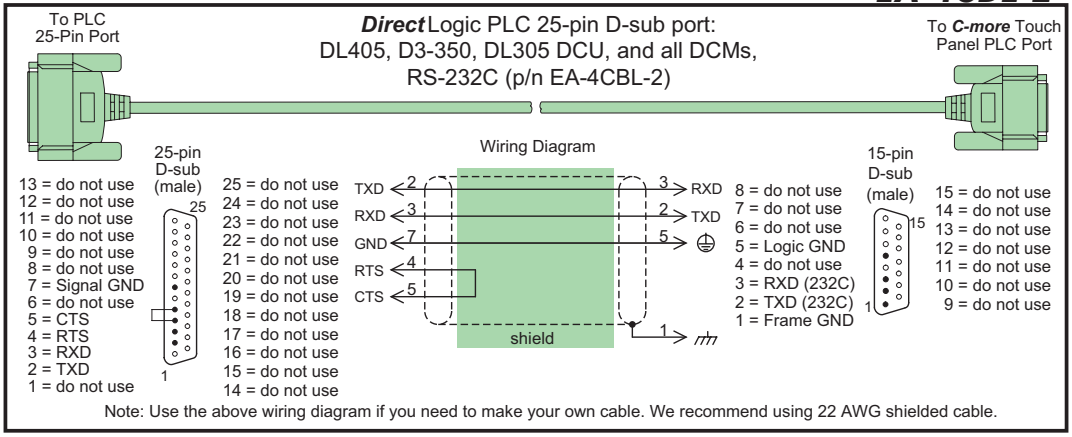

Note: Use the above wiring diagram if you need to make your own cable. We recommend using 22 AWG shielded cable.

AutomationDirect PLCs RS-422A/RS-485A:

When using the RS-422A/RS-485A capabilities of the *C-more* PLC communications port, the termination resistor is placed between the **RXD–** and **RXD+** terminals on the PLC side of the connection between the touch panel and PLC. The Termination Resistor value is based on the characteristic impedance of the cable being used. To enable the built-in 120 Ohm Termination Resistor, jumper pin **13** to pin **9** (**RXD+**) on the *C-more* 15-pin PLC communications port.

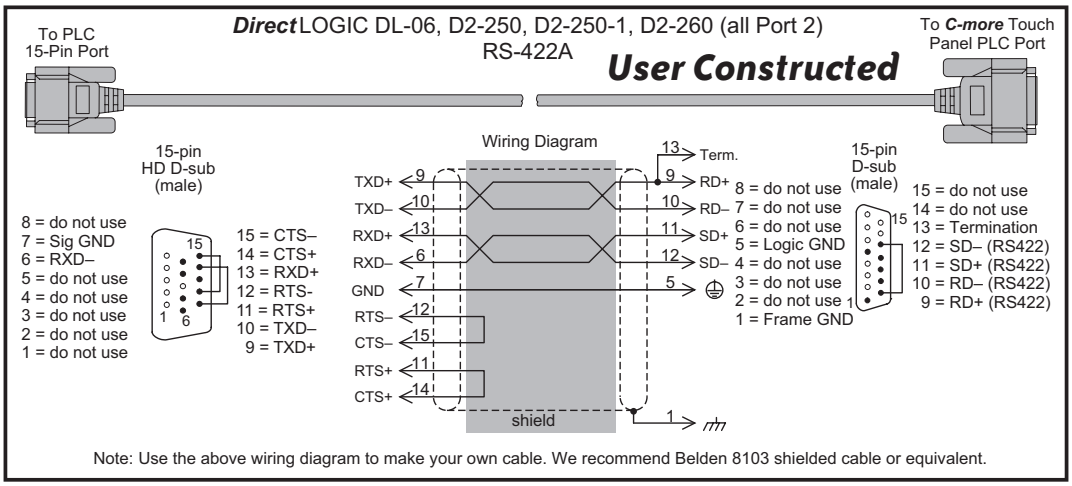

Note: Use the above wiring diagram to make your own cable. We recommend Belden 8103 shielded cable or equivalent.

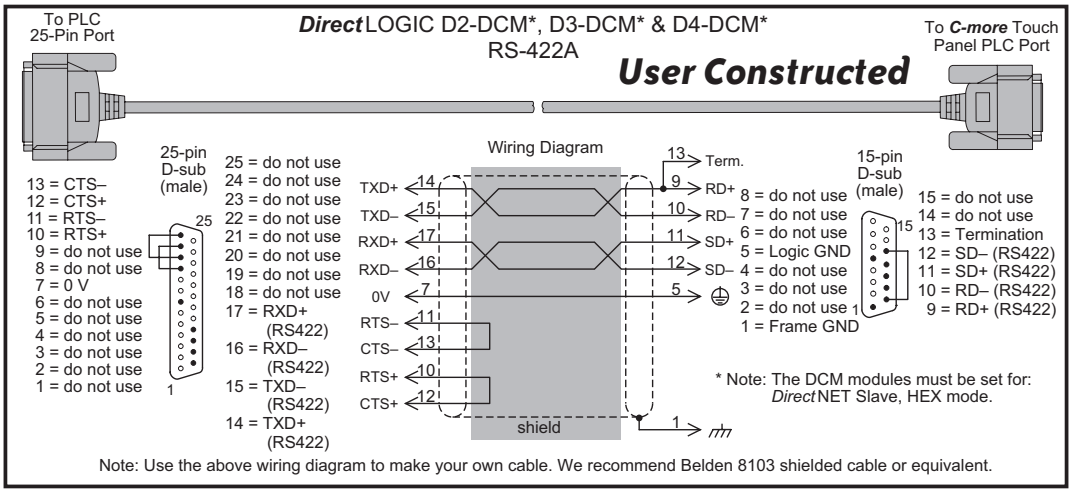

Note: Use the above wiring diagram to make your own cable. We recommend Belden 8103 shielded cable or equivalent.

NOTE: *The RS-422 wiring diagrams shown above are not for multi-drop networks involving connecting more than one PLC to a panel. Refer to the wiring diagram example on page 6-18 if more than one PLC will be connected to a panel.*

AutomationDirect PLCs RS-422A/RS-485A (cont'd):

User Constructed

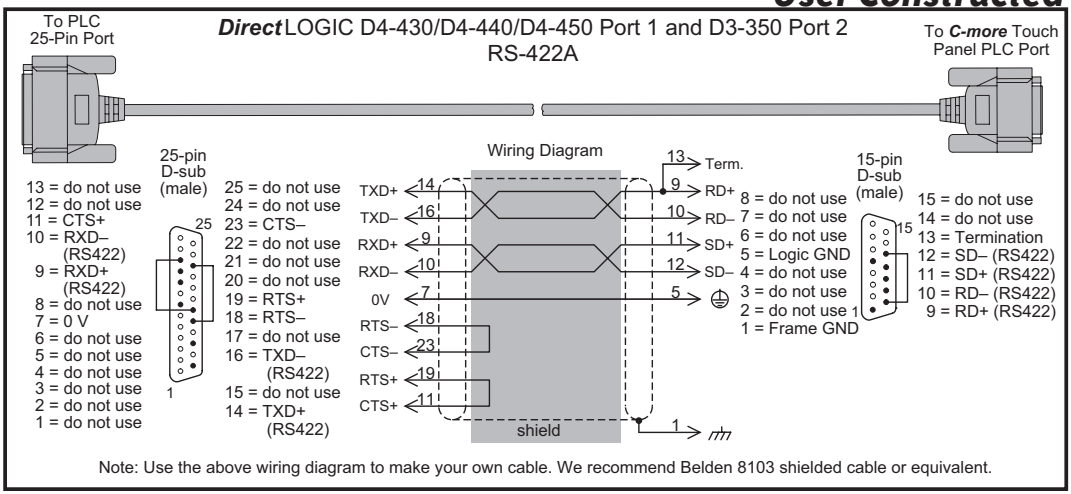

Note: Use the above wiring diagram to make your own cable. We recommend Belden 8103 shielded cable or equivalent.

User Constructed

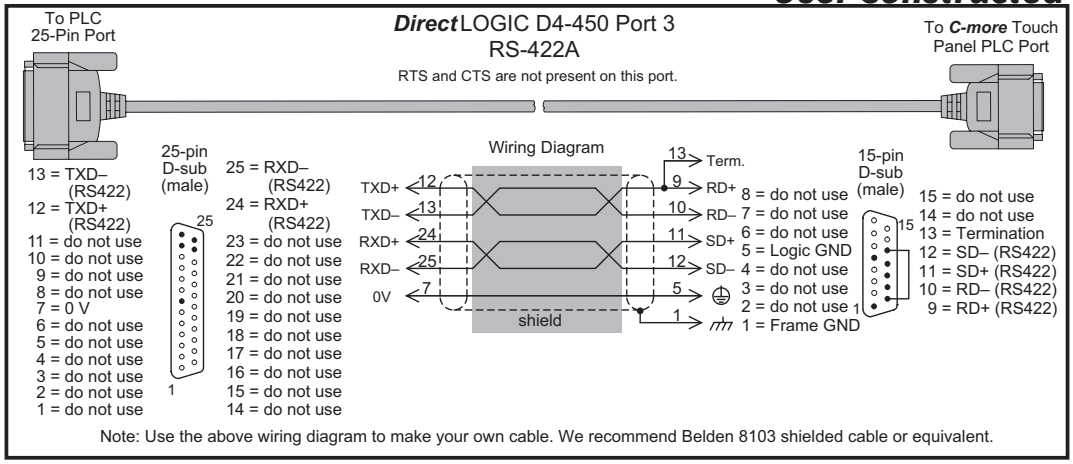

Note: Use the above wiring diagram to make your own cable. We recommend Belden 8103 shielded cable or equivalent.

NOTE: *The RS-422 wiring diagrams shown above are not for multi-drop networks involving connecting more than one PLC to a panel. Refer to the wiring diagram example on page 6-18 if more than one PLC will be connected to a panel.*

AutomationDirect PLCs RS-422A/RS-485A (cont'd):

User Constructed

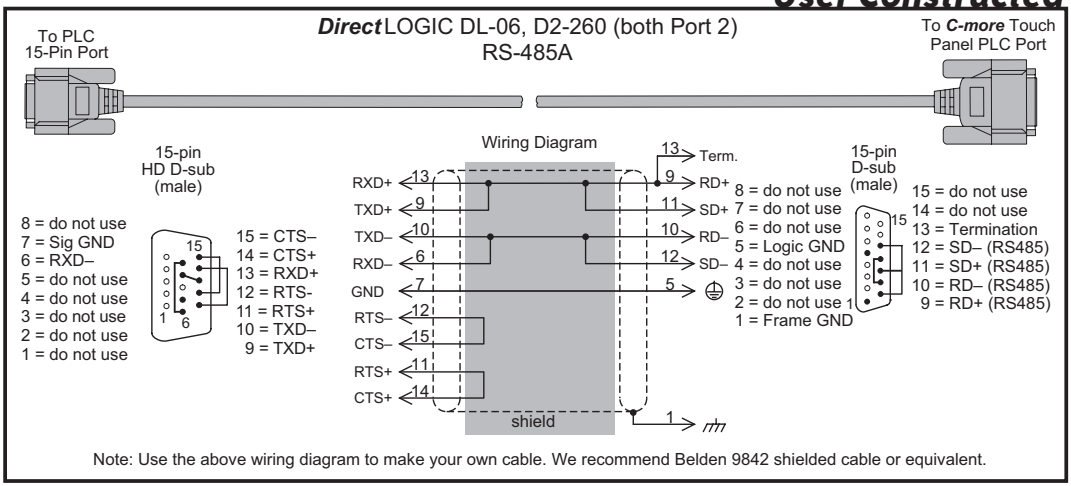

Note: Use the above wiring diagram to make your own cable. We recommend Belden 9842 shielded cable or equivalent.

NOTE: *The RS-485 wiring diagram shown above is not for multi-drop networks involving connecting more than one PLC to a panel. Refer to the wiring diagram example on page 6-18 if more than one PLC will be connected to a panel.*

AutomationDirect PLCs RS-422A/RS-485A (cont'd):

***Direct*LOGIC** ZIPLink ZL-CMA15L Adapter Module to EA-COMCON-3 Terminal Block Adapter
RS-485A – PLC D2-260 or DL06 only – Port 2

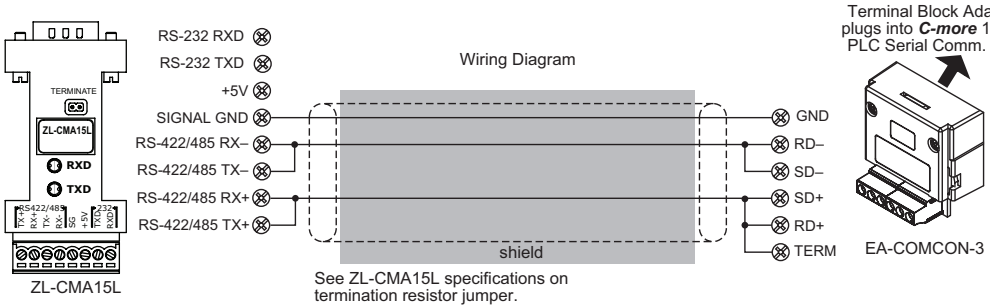

Note: Use the above wiring diagram to make your own cable. We recommend Belden 8103 shielded cable or equivalent.

***Direct*LOGIC** ZIPLink ZL-CMA15L Adapter Module to EA-COMCON-3 Terminal Block Adapter
RS-422A – PLC D2-250 (-1), D2-260 or DL06 – Port 2

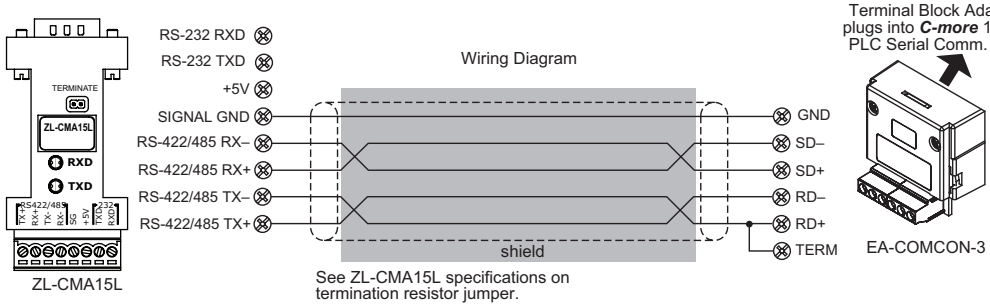

Note: Use the above wiring diagram to make your own cable. We recommend Belden 9842 shielded cable or equivalent.

NOTE: *The RS-422 and RS-485 wiring diagrams shown above are not for multi-drop networks involving connecting more than one PLC to a panel. Refer to the wiring diagram examples starting on page 6-18 if more than one PLC will be connected to a panel.*

AutomationDirect PLCs RS-422A/RS-485A (cont'd):

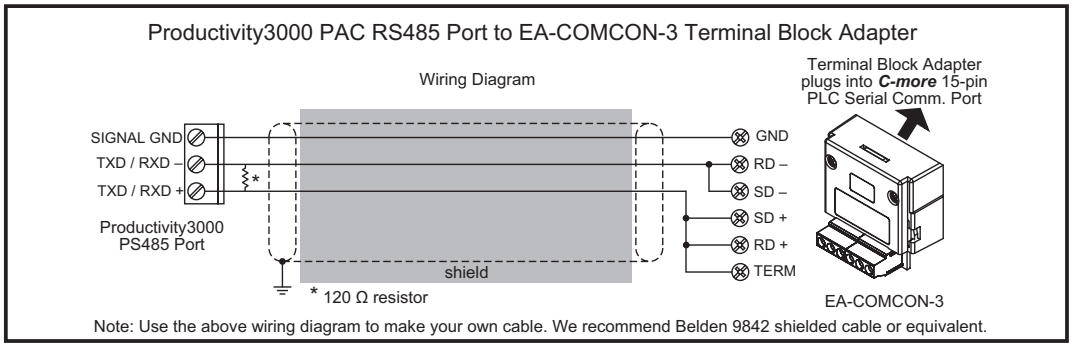

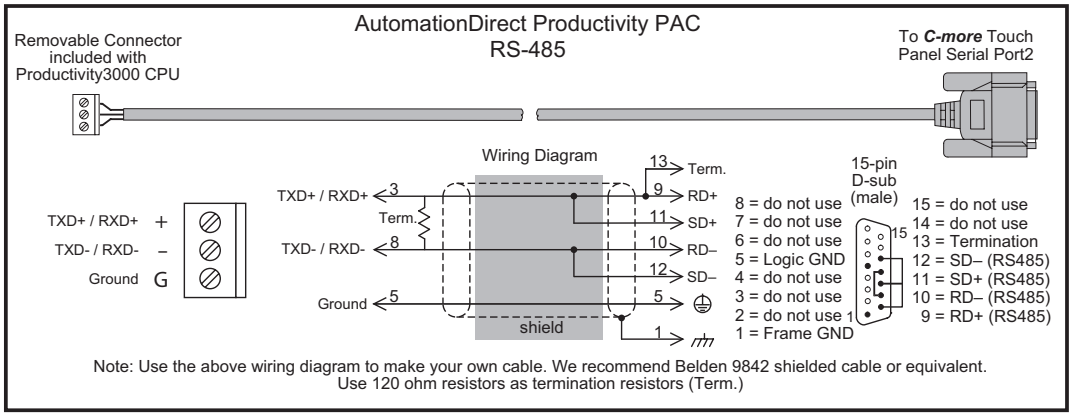

NOTE: *The RS-485 wiring diagrams shown above are not for multi-drop networks involving connecting more than one PLC to a panel. Refer to the wiring diagram examples starting on page 6-18 if more than one PLC will be connected to a panel.*

AutomationDirect PLCs RS-422A/RS-485A (cont'd):

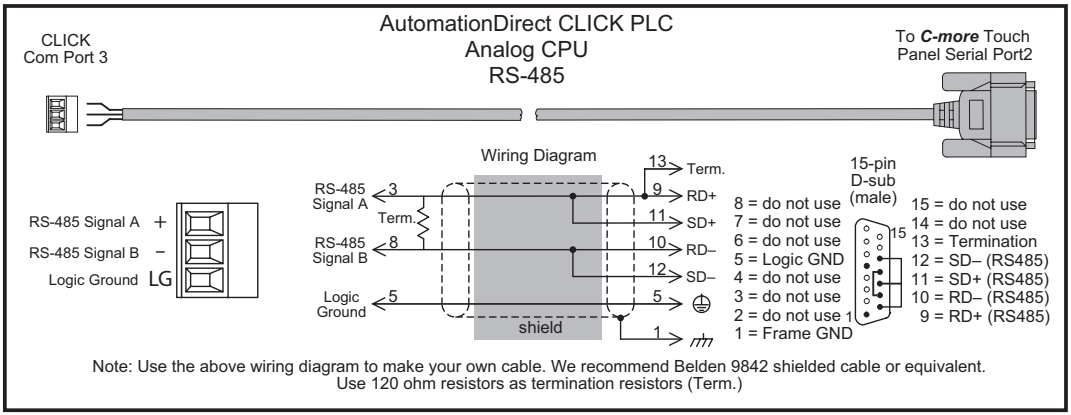

Note: Use the above wiring diagram to make your own cable. We recommend Belden 9842 shielded cable or equivalent.
Use 120 ohm resistors as termination resistors (Term.)

6

NOTE: *The RS-422 and RS-485 wiring diagrams shown above are not for multi-drop networks involving connecting more than one PLC to a panel. Refer to the wiring diagram examples starting on page 6-18 if more than one PLC will be connected to a panel.*

Direct LOGIC Universal Isolated Network Adapter, p/n FA-ISOCON:

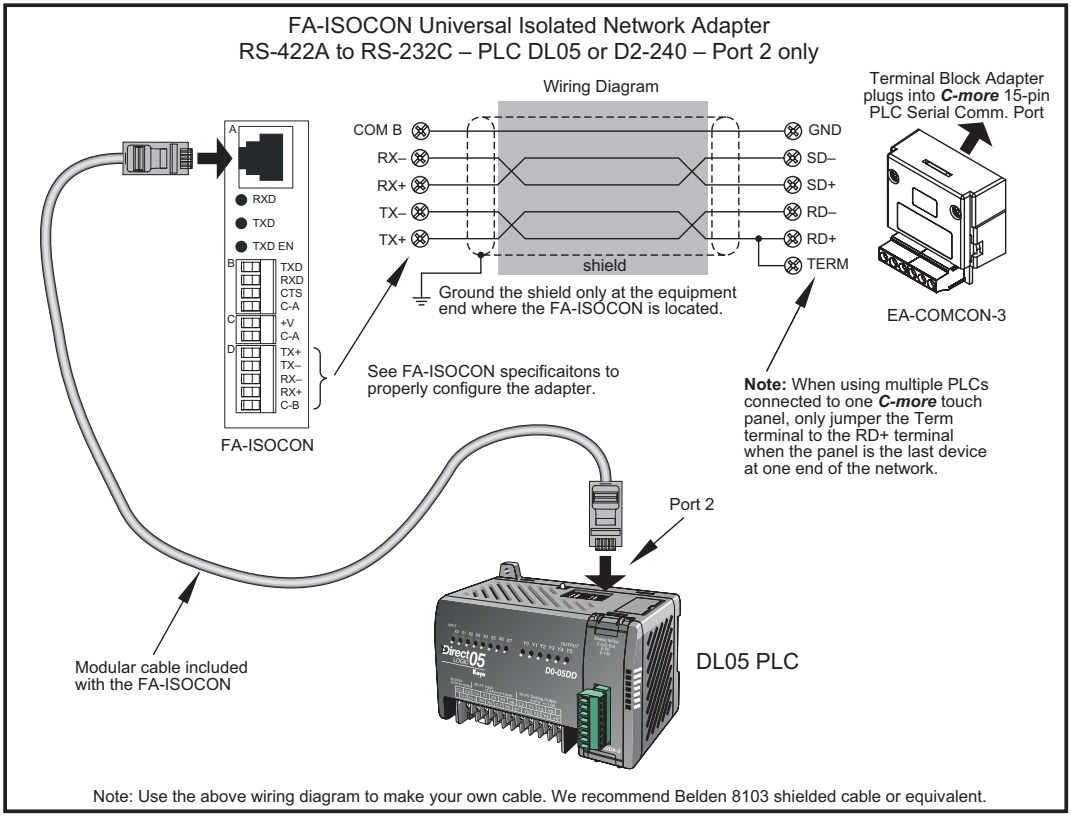

Direct LOGIC Universal Converter, p/n F2-UNICON:

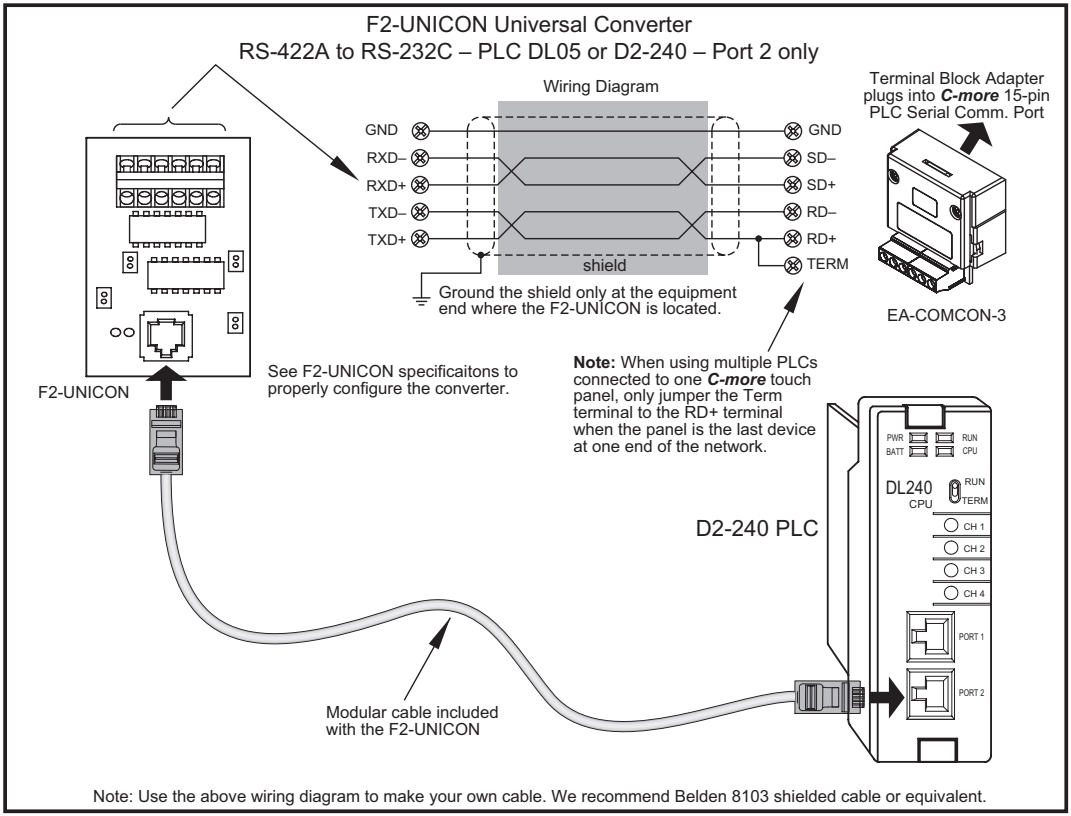

Note: Use the above wiring diagram to make your own cable. We recommend Belden 8103 shielded cable or equivalent.

RS-422A/RS-485A Multi-Drop Wiring Diagram Examples

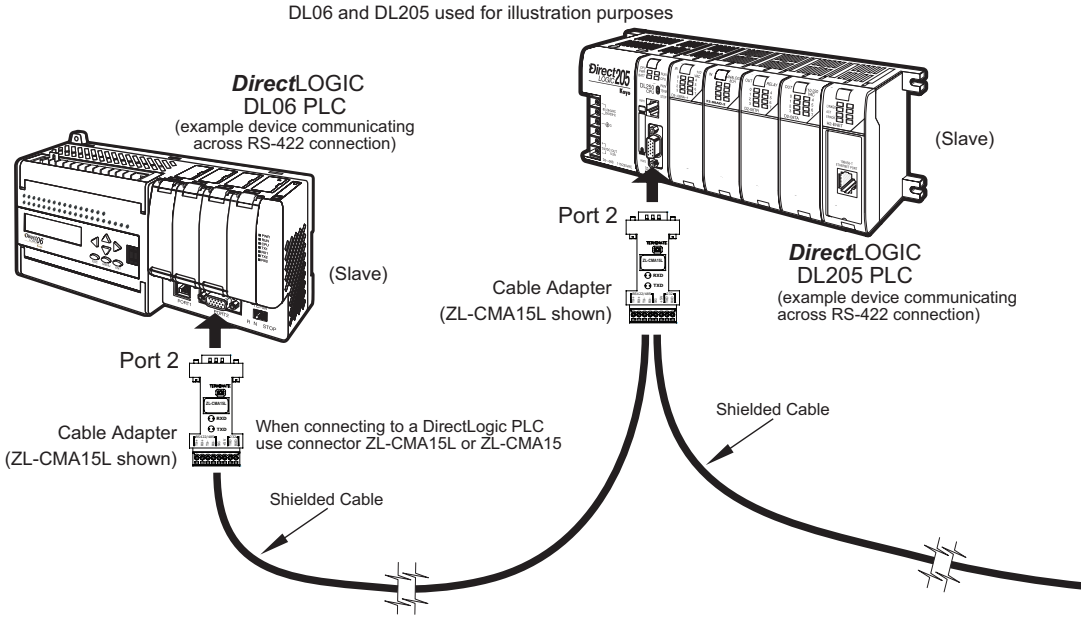

Notes: 1. We recommend Belden 8103 shielded cable or equivalent.
2. Wiring Diagram for this example, ZL-CMA15(L)

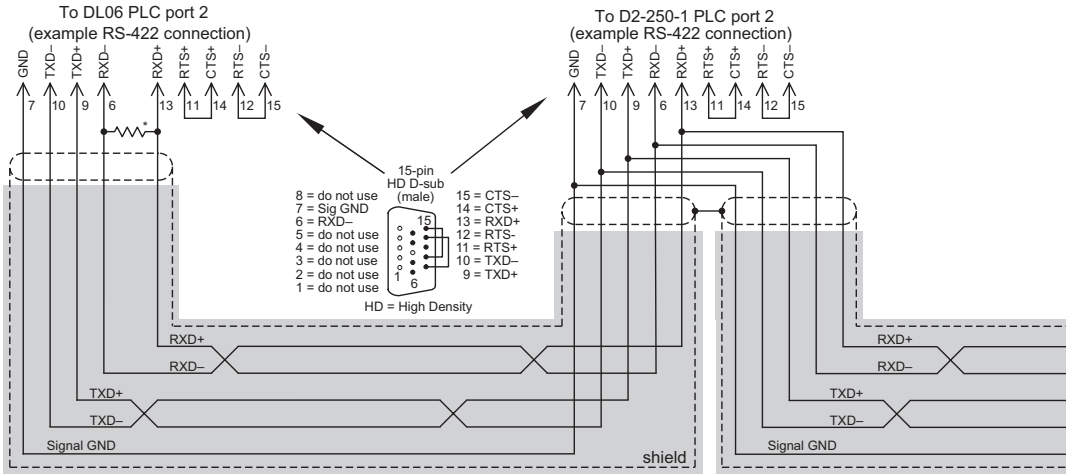

* Termination resistors required at both ends of the network receive data signals to match the impedance of the cable (between 100 and 500 ohms).

Typical RS-422 Multi-Drop Wiring Diagram

using DirectLogic pin numbers to illustrate

RS-422A/RS-485A Multi-Drop Wiring Diagram Examples (cont'd)

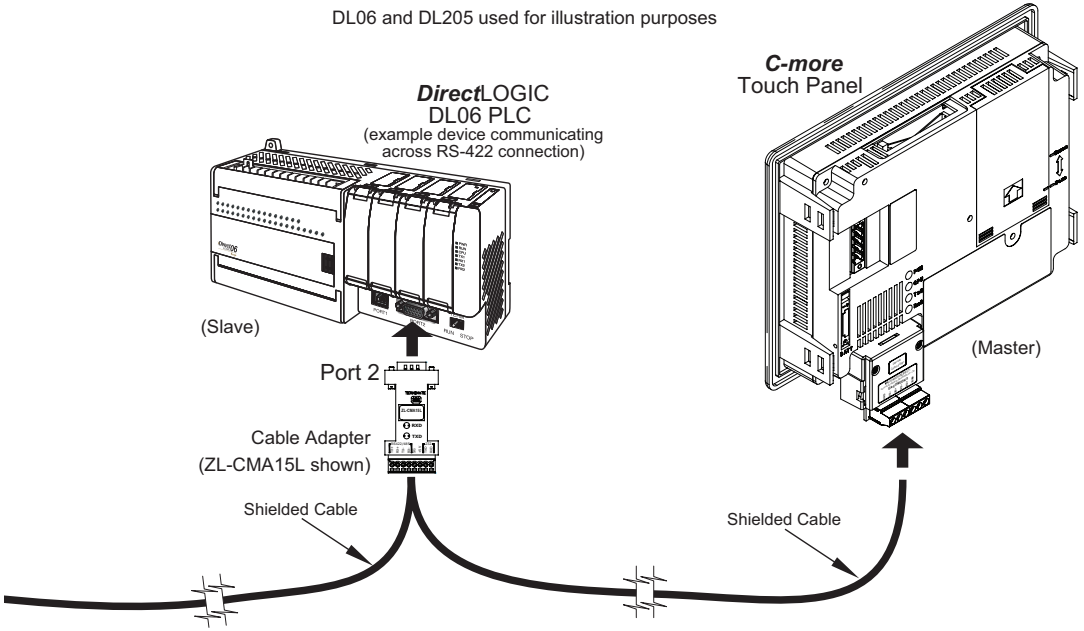

Notes: 1. We recommend Belden 8103 shielded cable or equivalent.
2. Wiring Diagram for this example, ZL-CMA15(L)

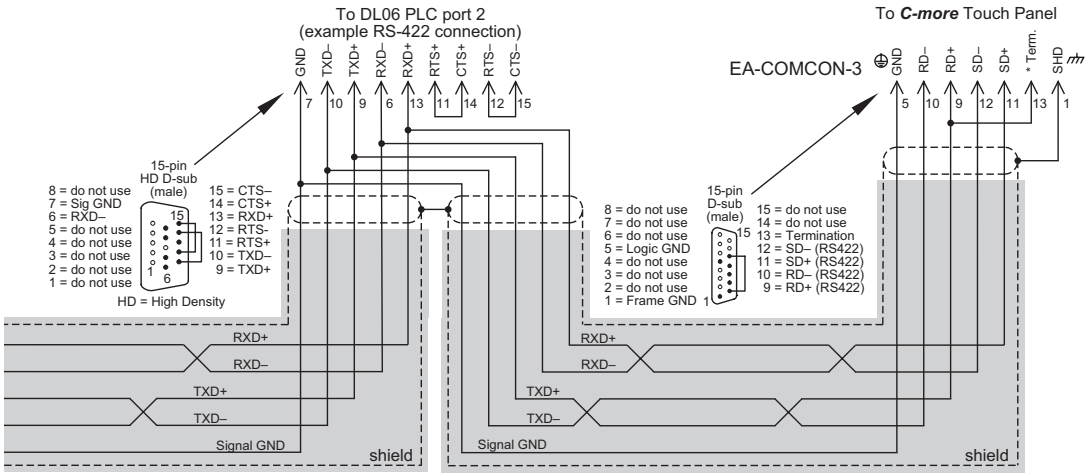

Typical RS-422 Multi-Drop Wiring Diagram (cont-d)

using DirectLogic pin numbers to illustrate

* Termination resistors required at both ends of the network receive data signals to match the impedance of the cable (between 100 and 500 ohms). Jumper pin 13 to 9 on the ***C-more*** Touch Panel 15-pin connector to place the 120Ω internal resistor into the network. If the cable impedance is different, then use an external resistor matched to the cable impedance.

RS-422A/RS-485A Multi-Drop Wiring Diagram Examples (cont'd)

DL06 and DL205 used for illustration purposes

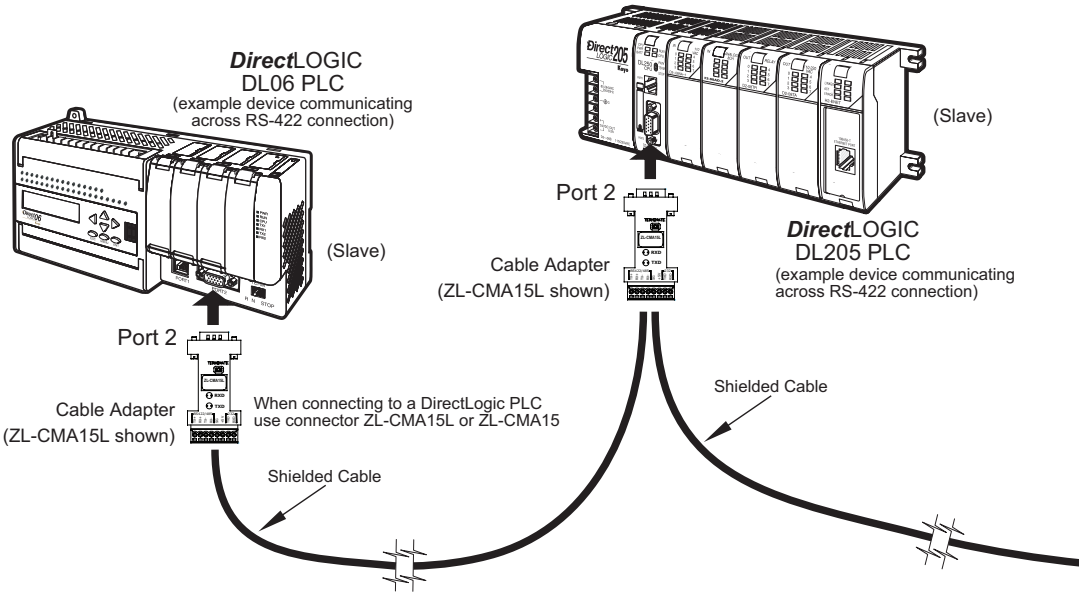

Notes: 1. We recommend Belden 9842 shielded cable or equivalent.
2. Wiring Diagram for this example, ZL-CMA15(L)

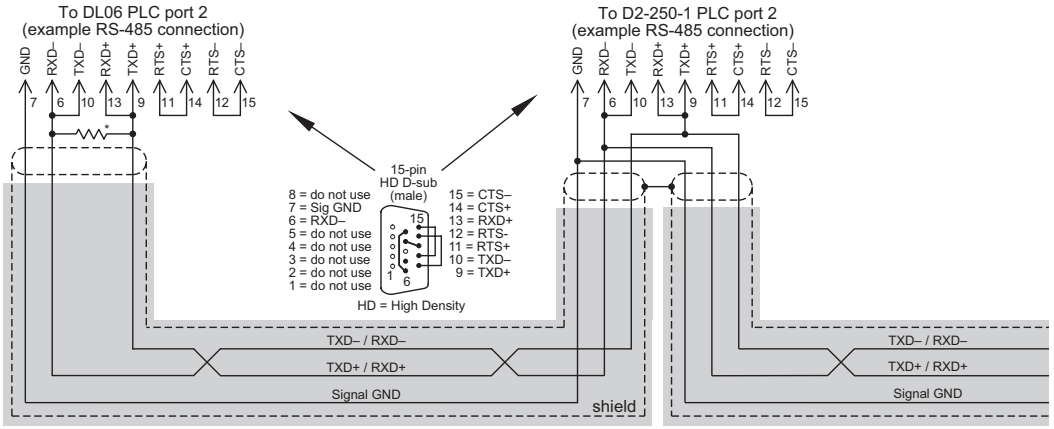

* Termination resistors required at both ends of the network to match the impedance of the cable (between 100 and 500 ohms).

Typical RS-485 Multi-Drop Wiring Diagram

using DirectLogic pin numbers to illustrate

RS-422A/RS-485A Multi-Drop Wiring Diagram Examples (cont'd)

DL06 and DL205 used for illustration purposes

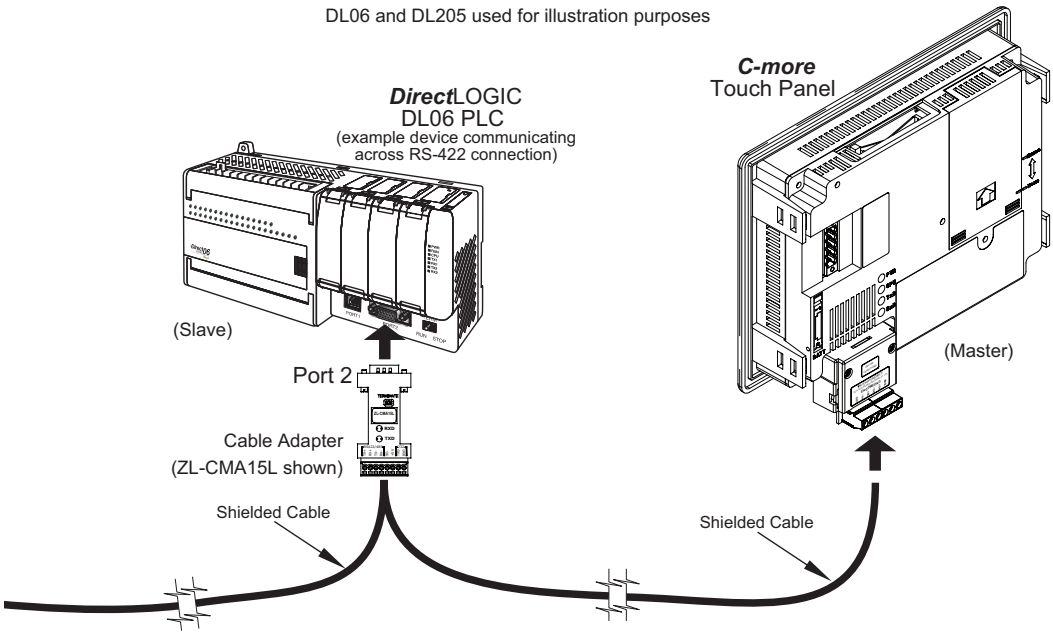

Notes: 1. We recommend Belden 9842 shielded cable or equivalent.
2. Wiring Diagram for this example, ZL-CMA15(L)

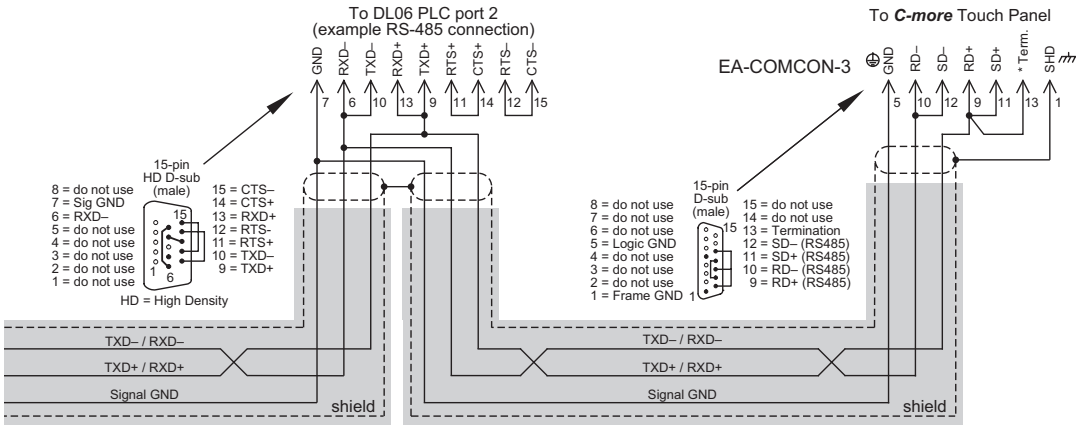

Typical RS-485 Multi-Drop Wiring Diagram (cont-d)

using DirectLogic pin numbers to illustrate

* Termination resistors required at both ends of the network receive data signals to match the impedance of the cable (between 100 and 500 ohms). Jumper pin 13 to 9 on the ***C-more*** touch panel 15-pin connector to place the 120Ω internal resistor into the network. If the cable impedance is different, then use an external resistor matched to the cable impedance.

Allen-Bradley:

EA-MLOGIX-CBL

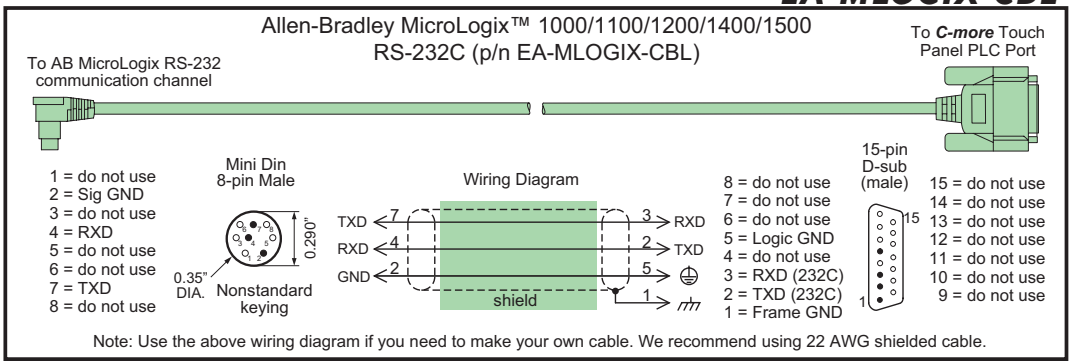

Note: Use the above wiring diagram if you need to make your own cable. We recommend using 22 AWG shielded cable.

EA-SLC-232-CBL

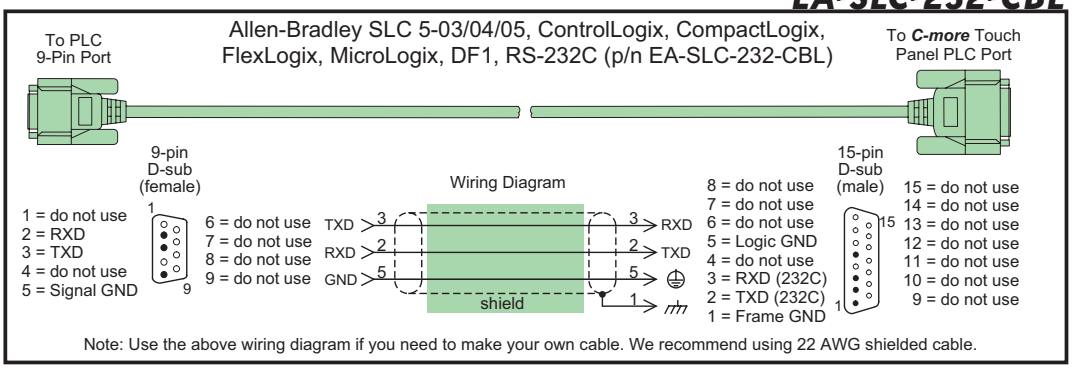

Note: Use the above wiring diagram if you need to make your own cable. We recommend using 22 AWG shielded cable.

EA-PLC5-232-CBL

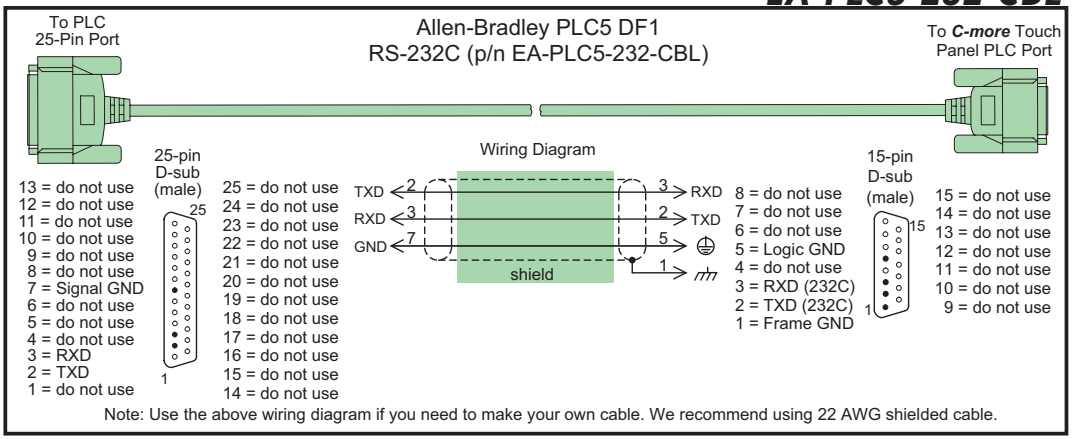

Note: Use the above wiring diagram if you need to make your own cable. We recommend using 22 AWG shielded cable.

Allen-Bradley (cont'd):

EA-DH485-CBL

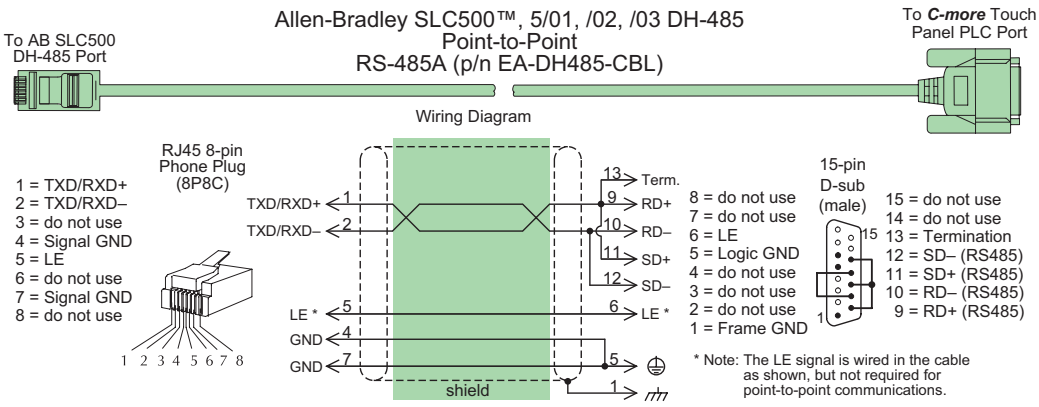

Note: Use the above wiring diagram if you need to make your own cable. We recommend Belden 9842 shielded cable or equivalent.

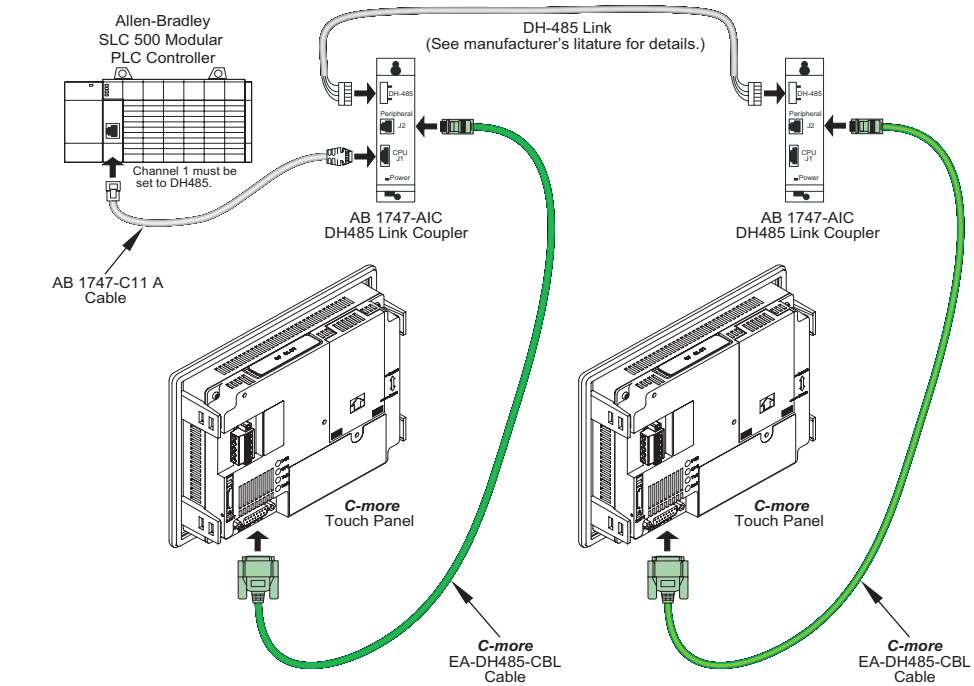

Note: The above diagram shows connecting multiple ***C-more*** touch panels to an Allen-Bradley DH485/AIC network using the AB DH485 Link Coupler, p/n 1747-AIC. Select the "Allen-Bradly DH485/AIC SLC500 MircroLogix" driver in the ***C-more*** Programming Software when starting the project. Also, set the AB channel configuration for DH485.

Allen-Bradley (cont'd):

Allen-Bradley SLC500™ 5/03 DH-485/AIC to Multiple ***C-more*** Touch Panels
(using ***C-more*** cables p/n EA-MLOGIX-CBL, EA-SLC-232-CBL)

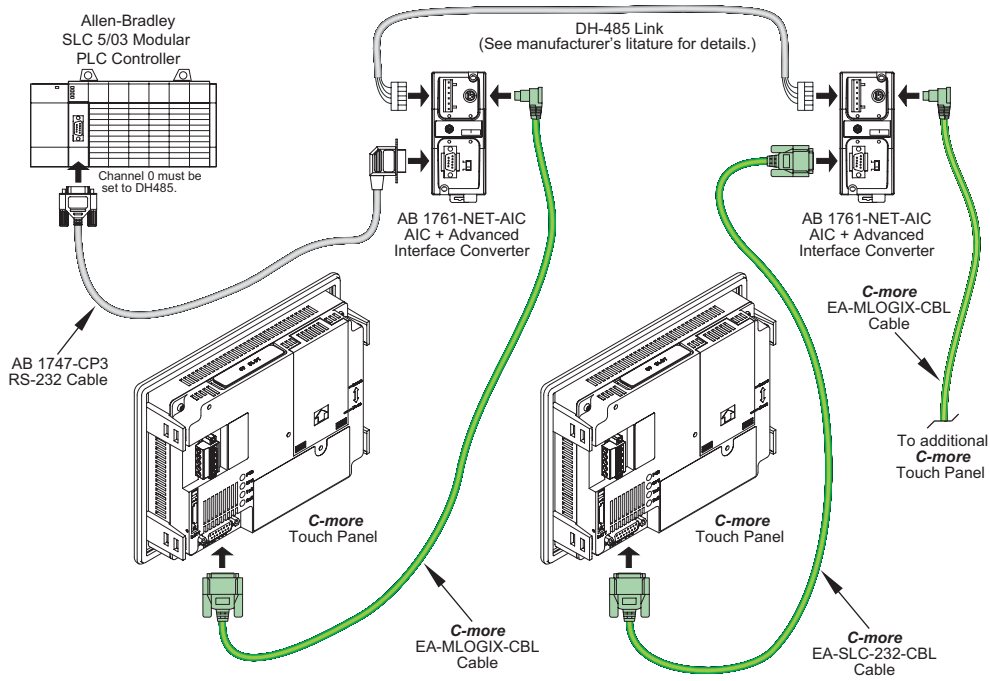

Note: The above diagram shows connecting multiple ***C-more*** touch panels to an Allen-Bradley DH485/AIC network using the AB AIC+ Advanced Interface Converter, p/n 1761-NET-AIC. Select the "Allen-Bradly DH485/AIC SLC500 MircroLogix" driver in the ***C-more*** Programming Software when starting the project. Also, set the AB channel configuration for DH485.

Allen-Bradley (cont'd):

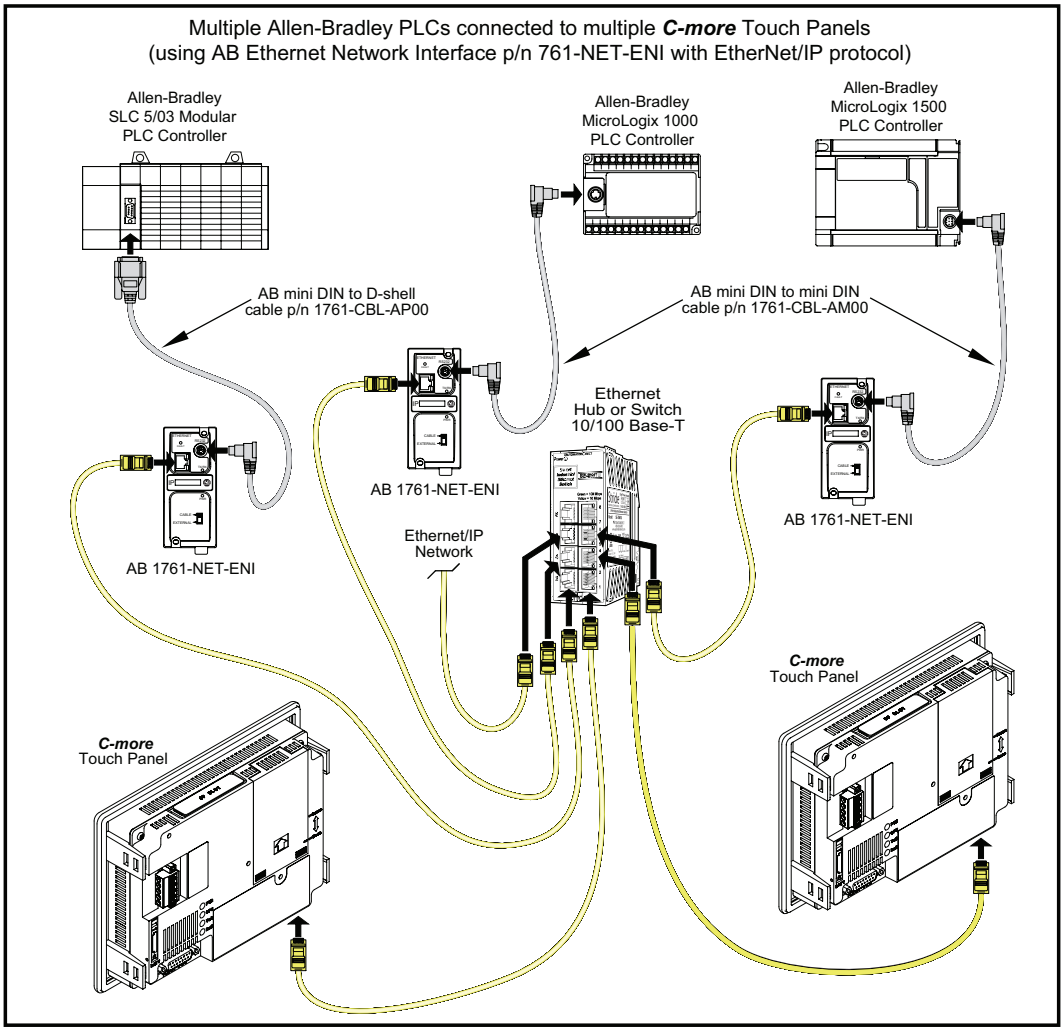

Allen-Bradley (cont'd):

User Constructed

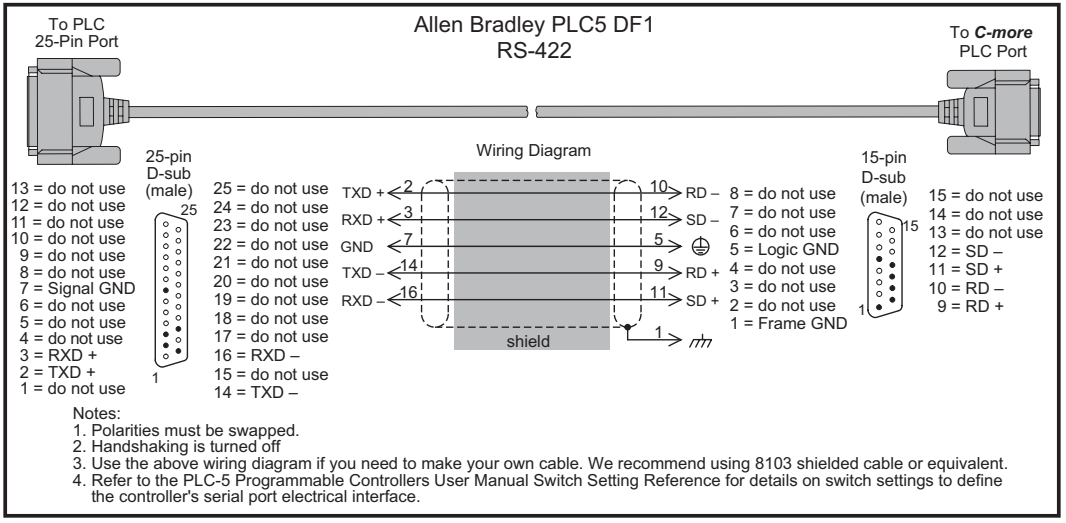

Notes:
1. Polarities must be swapped.
2. Handshaking is turned off
3. Use the above wiring diagram if you need to make your own cable. We recommend using 8103 shielded cable or equivalent.
4. Refer to the PLC-5 Programmable Controllers User Manual Switch Setting Reference for details on switch settings to define the controller's serial port electrical interface.

GE:

EA-90-30-CBL

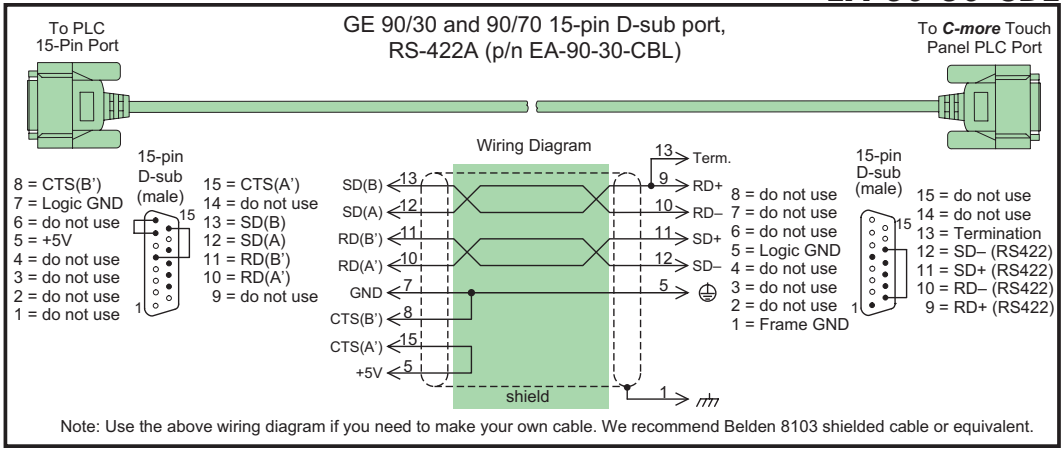

Note: Use the above wiring diagram if you need to make your own cable. We recommend Belden 8103 shielded cable or equivalent.

GE VersaMax Micro:

User Constructed

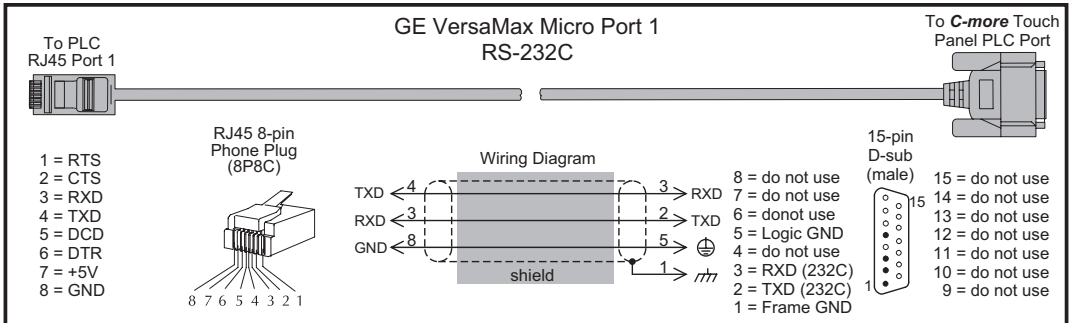

Note: Use the above wiring diagram to make your own cable. We recommend using 22 AWG shielded cable.

Mitsubishi:

EA-MITSU-CBL

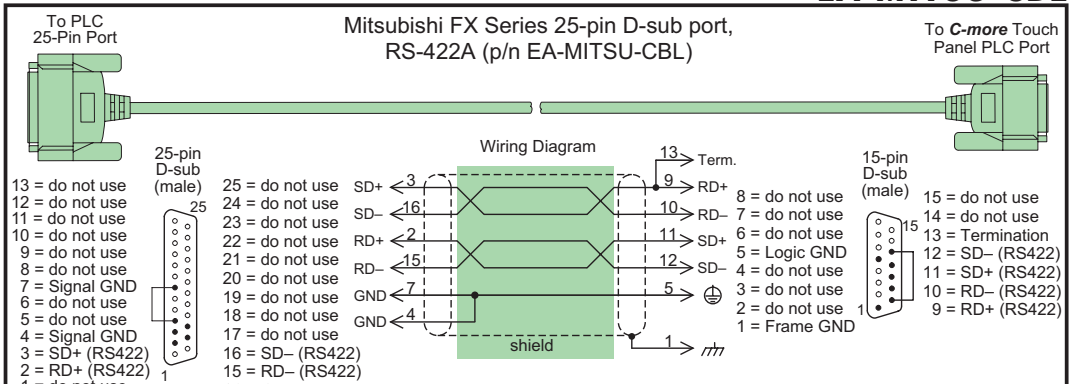

Note: Use the above wiring diagram if you need to make your own cable. We recommend Belden 8103 shielded cable or equivalent.

Mitsubishi(cont'd):

EA-MITSU-CBL-1

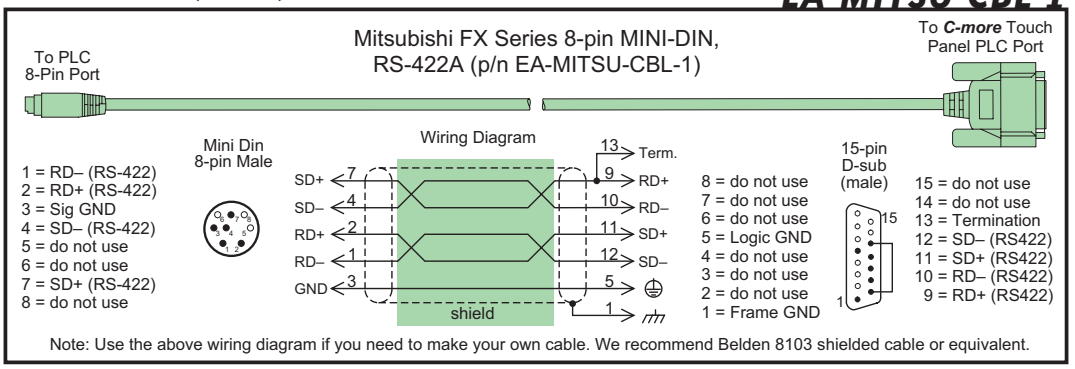

Note: Use the above wiring diagram if you need to make your own cable. We recommend Belden 8103 shielded cable or equivalent.

6

User Constructed

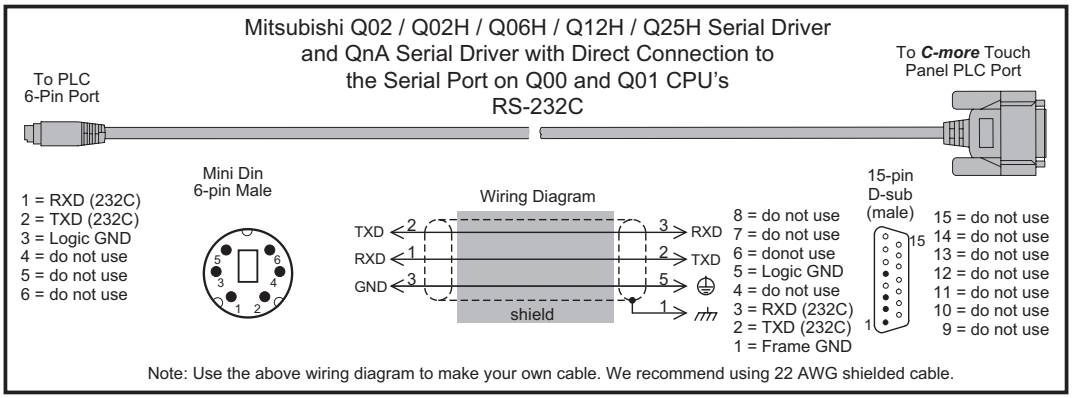

Note: Use the above wiring diagram to make your own cable. We recommend using 22 AWG shielded cable.

User Constructed

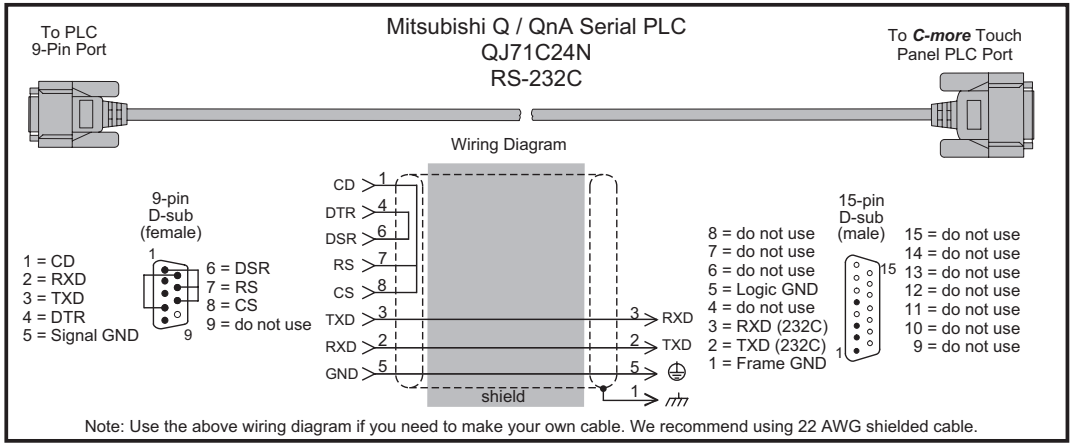

Note: Use the above wiring diagram if you need to make your own cable. We recommend using 22 AWG shielded cable.

Omron:

EA-OMRON-CBL

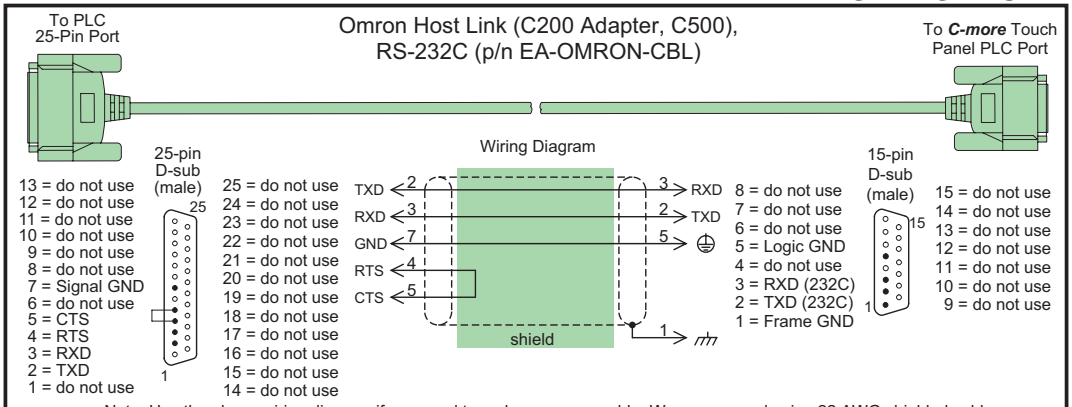

Note: Use the above wiring diagram if you need to make your own cable. We recommend using 22 AWG shielded cable.

User Constructed

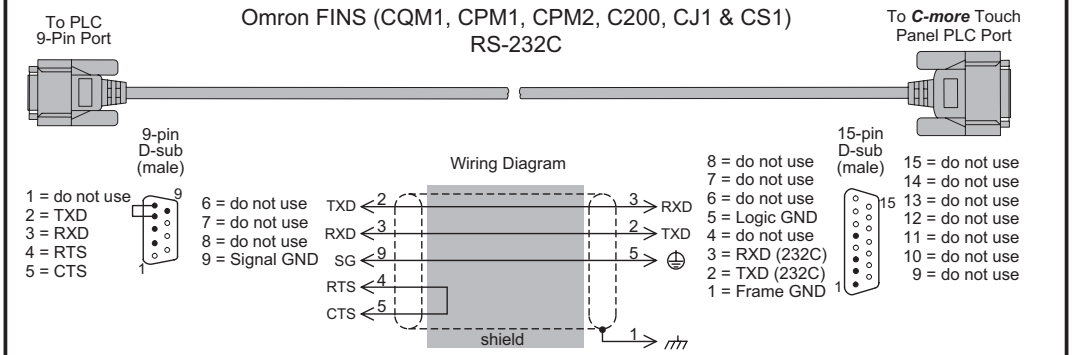

Note: Use the above wiring diagram to make your own cable. We recommend using 22 AWG shielded cable.

User Constructed

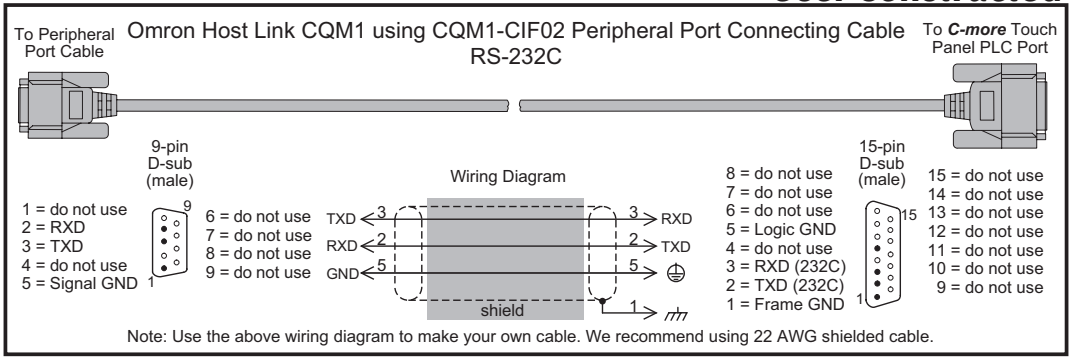

Note: Use the above wiring diagram to make your own cable. We recommend using 22 AWG shielded cable.

Modicon ModBus RS-232:

User Constructed

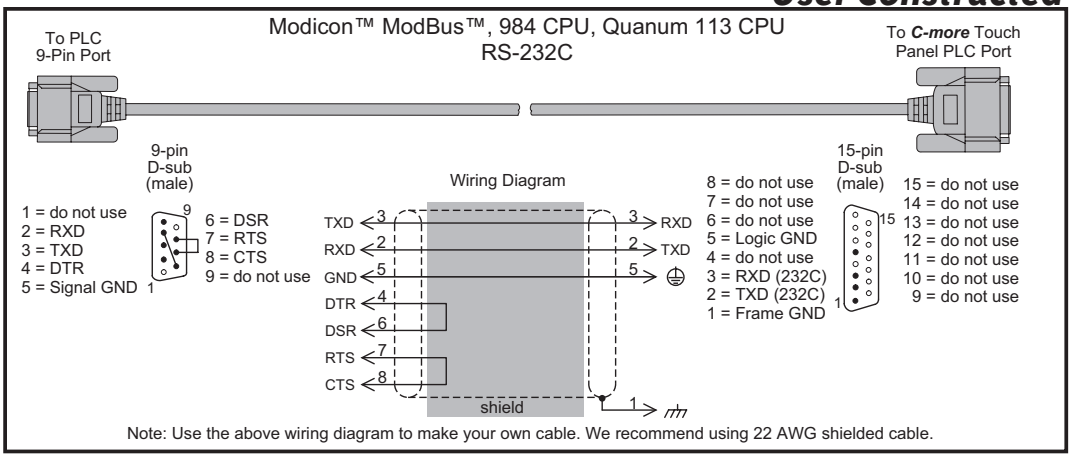

Note: Use the above wiring diagram to make your own cable. We recommend using 22 AWG shielded cable.

Modicon Micro Series:

User Constructed

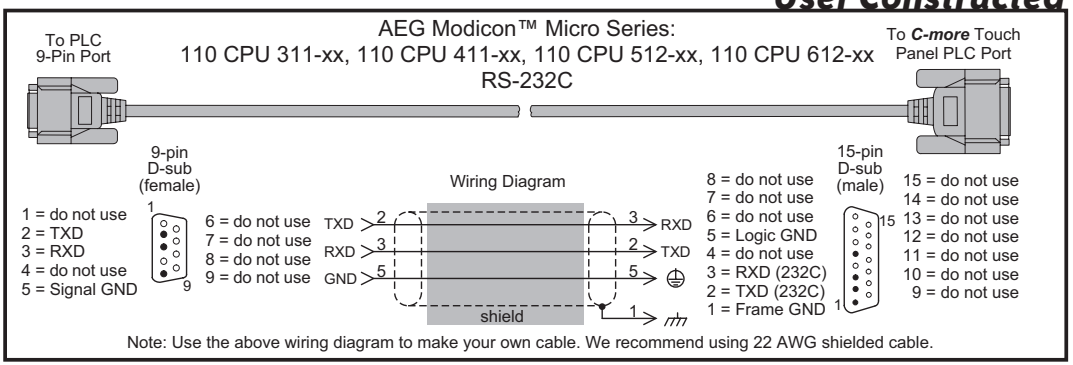

Note: Use the above wiring diagram to make your own cable. We recommend using 22 AWG shielded cable.

Modicon ModBus with RJ45:

User Constructed

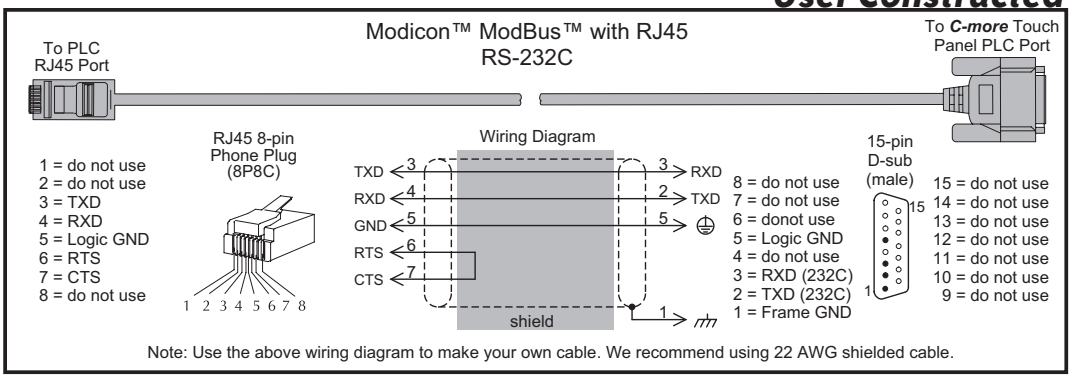

Note: Use the above wiring diagram to make your own cable. We recommend using 22 AWG shielded cable.

Siemens:

User Constructed

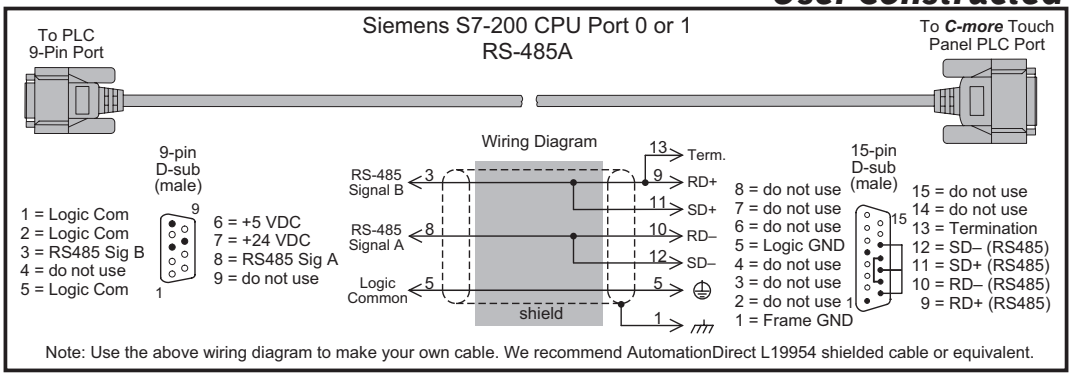

Note: Use the above wiring diagram to make your own cable. We recommend AutomationDirect L19954 shielded cable or equivalent.

Maintenance

In This Chapter...

Project Backup 7–2
Check Operating Environment 7–2
Check Operating Voltage 7–2
Check Status Indicators 7–2
Check Physical Conditions 7–3
Run Tests under System Setup Screens 7–3
Check Memory Usage via System Setup Screens 7–4
Check/Adjust Display Brightness or Contrast 7–4
Check Error Log via System Setup Screens 7–4
Adjust Touch Panel via System Setup Screens 7–4
Replace Battery Periodically 7–5
Cleaning the Display Screen 7–5
Check Project Functionality 7–6
Checks from *C-more* Programming Software 7–6

Maintenance

Although the *C-more* touch panels require very little maintenance, setting up a routine maintenance schedule will insure the longevity of the product in your application.

The following are some suggestions of items to include in a preventive maintenance list or schedule. Most of these items should be scheduled quarterly or bi-annually.

Project Backup

- During a routine preventive maintenance schedule is a good time to make sure that there is an up-to-date backup of the application project. Although the *C-more* touch panel with its programming software has the ability to upload the complete project from a panel through the programming software, insurance is warranted just in case the worse case scenario happens and the entire touch panel is destroyed.

Check Operating Environment

- Make sure the touch panel is operating in the proper temperature range: (0 to 50 °C (32 to 122 °F)).
- Make sure the touch panel is operating within the specified humidity range: (10–85% RH, non-condensing).
- Make sure the operating environment is free of corrosive gasses.

Check Operating Voltage

- Check the input voltage that is powering the touch panel to make sure it is within the appropriate range.

DC: If the panel is being powered with a DC power source, then the acceptable range is 20.4 to 28.8 VDC. (24 VDC, -15%, +20%, minimum of 1.5 A)

AC: If the panel is being powered from an AC/DC Power Adapter, EA-AC, then the acceptable input voltage range to the adapter is 100-240 VAC, 50/60 Hertz.

Check Status Indicators

- During a routine maintenance check is a good time to take a quick look at the status indicators on the rear of the touch panel. The Power LED (PWR) indicator should be on and there should be activity on the TxD and RxD LED indicators when connected serially to a PLC or control device. Check the status of the CPU LED and compare it to the chart shown in the illustration below. Any indication of the CPU LED other than a solid green shows there is a possible problem, and the condition needs to be corrected.

CPU Status LED (Green, Orange & Red)	
Off	Power Off
Green	Normal – CPU Run State
Red	Memory Error
Blinking Red	Operating System not found
Blinking Orange	LCD Backlight Failure
Blinking Green	Power Loss Detection

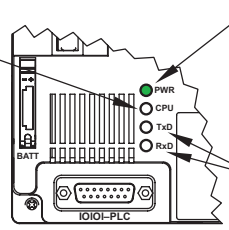

Rear View

Power LED (Green)	
On	Power On
Off	Power Off

Serial TxD/RxD LED (Green)	
On	Comm. is active
Off	No communication

Check Physical Conditions

- Make sure that harmful chemicals are not being used around the panel. Look for any deterioration of the touch panel's bezel and front display area. See **Chapter 2: Specifications** for a chemical compatibility list.
- Check the mounting gasket to make sure it is sealing properly and has not deteriorated. Replace the mounting gasket if there are any signs of deterioration, or if there is any evidence that moisture/liquids have penetrated to the inside of the enclosure where the panel is mounted. Information on a replacement gaskets can be found in **Chapter 9: Replacement Parts**.

- Check to make sure that none of the cooling vents around the inside section of the touch panel are clogged with dust or debris. Also make sure that there is clearance around the touch panel as shown in **Chapter 4: Installation and Wiring**.

Run Tests under System Setup Screens

- Use the touch panel's System Setup Screens to test the touch screen, display, communication ports, beeper and audio output (only with external amplifier and speaker(s) connected). See **Chapter 5: System Setup Screens** for additional details for the **Test Menu**.

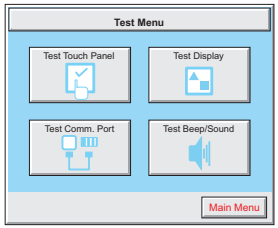

Test Touch Panel - allows the user to check the analog touch function of the screen by drawing free hand lines and shapes across the entire touch area. The display will retain the lines where the screen has been touched until the **Cancel** button is pressed.

Test Display - used to test the display and color rendition. A test pattern will first show both the primary colors (if applicable) and a gray scale. If the touch screen is not pressed within a few seconds, the display will go into alternating color sweeps across the screen until the panel is pressed again. If the screen is pressed when the test pattern first appears, it will stay in this mode until the **Cancel** button is pressed.

Test Comm. Port - used to test the functionality of both the 15-pin PLC communication serial port and the Ethernet port (non -R models only). A loop-back connector can be fabricated and used on the 15-pin serial port to test both the RS-232 and RS-422/485 communications for the TxD and RxD signals and also the RTS and CTS signals if applicable. The **Test Comm. Port** setup screen and **Chapter 5** show pin-outs for the both the RS-232 and RS-422/485 loop-back connectors. The Ethernet connection can also be tested for communications if it is at least connected to an Ethernet hub or switch. If the touch panel is connected to a PLC, then an inquiry test can also be done to test the communications between the panel and the PLC. Press the **Cancel** button when finished to return to the **Test Menu** screen.

Test Beeper/Sound - used to test the touch panel's internal beeper and also test the audio line output port with an external amplifier and speaker(s) connected. Testing the audio output is done by playing an included internal WAV file. Press the **Cancel** button when finished to return to the **Test Menu** screen.

Check Memory Usage via System Setup Screens

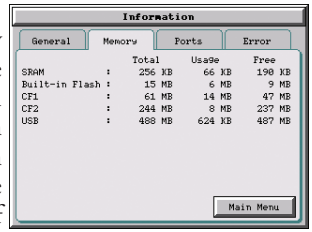

- A good time to check and record the touch panel's memory usage for future reference is during a routine maintenance schedule. The various memory devices being used by the panel are listed under the tab. This includes the SRAM, Built-in Flash and any external memory device such as a USB pen drive or CompactFlash memory. If no external memory device is inserted, it will not show up on the list. The amount of total, used and free memory is shown. The memory usage can be viewed by use of the panel's **System Setup Screen's Main Menu**, and then selecting the **Information** button. Look under the **Memory** tab. See **Chapter 5: System Setup Screens** for additional details on using the **Memory** tab.

Check/Adjust Display Brightness or Contrast

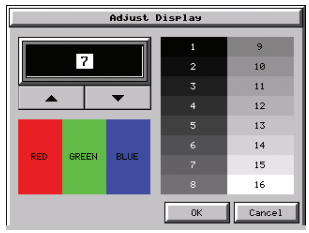

- Is is good practice to occasionally check the display brightness or contrast and adjust as required. This is done by using the **Setting Menu** in the **System Setup Screens**. Keep in mind that only the **contrast** can be adjusted on the STN type display models and only the **brightness** can be adjusted on the TFT type display models. See **Chapter 5: System Setup Screens** for additional details.

Check Error Log via System Setup Screens

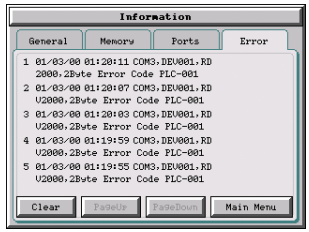

- Another good practice is to review the touch panel's **Error Log**. The log can be viewed by use of the panel's **System Setup Screen's Main Menu**, and then selecting the **Information** button. Look under the **Error** tab. See **Chapter 5: System Setup Screens** for additional details on using the **Error** tab, **Appendix A: PLC Protocol Error Codes** for a list of the error codes as they relate to the specific PLC that is being used with a description of the error, and **Appendix B:Touch Panel Runtime Errors** for a list of errors that may occur when the panel is in operation.

Adjust Touch Panel via System Setup Screens

- It is recommended that a regularly scheduled maintenance program include **adjusting** the touch panel. The adjustment can be looked at as "calibrating" the touch area of the panel. The procedure should also be done anytime that it seems the touch area being pressed for an object is out of position by a small amount. The procedure is done by using the **Setting Menu** in the **System Setup Screens** and then selecting the **Adjust Touch Panel** button. See **Chapter 5: System Setup Screens** for additional details.

Replace Battery Periodically

- The lithium battery in the touch panel is used to maintain the system SRAM retentive memory and the CPU date/time registers when the unit is without external power. Before replacing the battery, back-up the data in your SRAM retentive memory as a precaution. **Input power needs to be maintained to the panel during battery replacement or the SRAM retentive memory and date/time registers will be cleared.** Typical battery life is five years, which includes panel runtime and normal shutdown periods. The battery's status can be checked under the **General** tab of the **Information** screen of the **System Setup Screens**, see **Chapter 5**. However, consider installing a fresh battery if your battery has not been replaced recently and the unit will be without power for a period of more than ten days. A replacement battery can be purchased from ***AutomationDirect*** as part number D2-BAT-1 (#CR2354).

D2-BAT-1

CAUTION - The battery used in this device may present a risk of fire or chemical burn if mistreated. Do not recharge, disassemble, heat above 100 °C (212 °F) or incinerate. Replace battery with AutomationDirect part number D2-BAT-1 or CR2354 only. Use of another battery may present a risk of fire or explosion. Dispose of used battery properly. Keep away from children.

Perchlorate Material, special disposal handling may apply

Cleaning the Display Screen

- The display screen should be cleaned periodically by wiping it with a lint free damp cloth using a mild soap solution. Dry the surface when finished with a lint free cloth. Do not clean with ammonia based products. The ABS material the bezel is made from is reactive with ammonia.
- The longevity of the display can be increased by the use of a non-glare screen protector, p/n **EA-XX-COV2**, where XX = touch panel screen size, 6, 8, 10, 12, or 15. See **Chapter 3: Accessories** for additional information on the screen protectors.

EA-6-COV2

- To prevent damage to the display screen, avoid touching the screen with sharp objects, striking the screen with a hard object, the use of abrasives near the screen, or using excessive force when pressing the touch screen. In the event that the touch screen membrane becomes damaged or scratched, the bezel, which includes the clear membrane window, can be replaced on the 8", 10", 12" and 15" touch panels. See **Chapter 9: Replacement Parts** for additional information on the replacement bezels. The bezel with clear membrane window can be replaced on the 6" touch panels by calling our technical support department at 770-844-4200 to make arrangements for returning the unit for repair.

Check Project Functionality

- During a routine maintenance schedule is a good time to check the functionality of your application, making sure that various areas on different screens do what they were designed to do. An outline or specification for the application is a useful tool for testing the various aspects of your application. As a starting point, you may want to run through all the screens to make sure they are accessible.
- If there are any trouble-shooting procedures built into the touch panel application, now is a good time to also check these aids.

Checks from *C-more* Programming Software

- If you have a PC available with the ***C-more*** programming software, EA-PGMSW, installed, and the PC is connected to the touch panel, there are checks you can make to the status of the touch panel by using the **Panel Information...** feature located under the **Main Menu** heading **Panel**. This includes the following:
  - Connect Panel Information
  - Memory availability and usage
  - Power Voltage
  - Battery Voltage:
  - Revisions

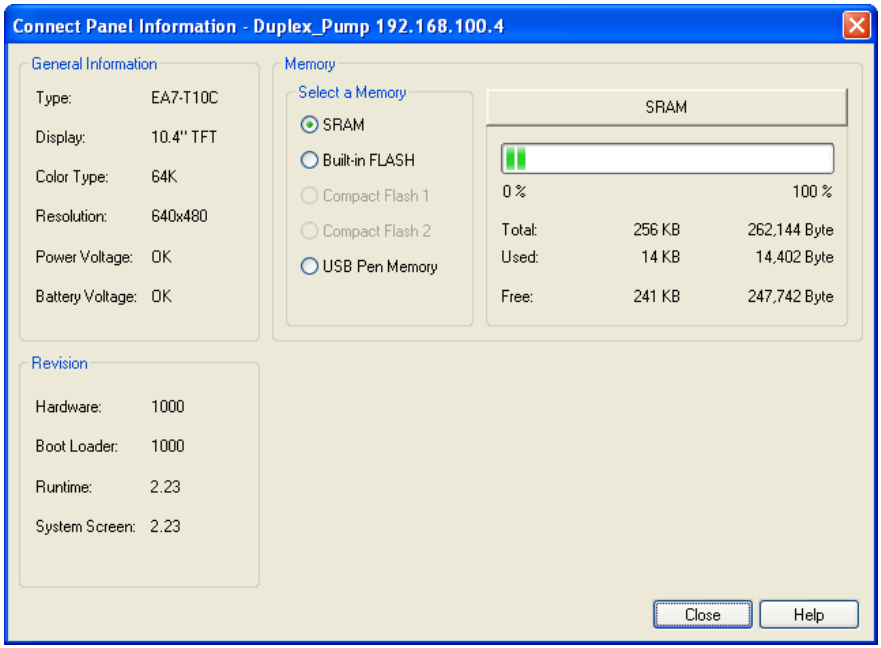

- Other functions that can be accessed from the programming software directly to the touch panel include: **Display Screen**, **Reboot**, **Adjust Clock**, **Memory Clear**, and **Update Firmware**. Additional information for these functions can be found in the ***C-more*** programming software on-line help.

Notes:

TROUBLESHOOTING

In This Chapter...

Common Problems 8–2
Toubleshooting Flow Chart 8–3
Touch Panel does not Power up 8–4
Display is Blank 8–5
Display is Dim 8–6
No User Program 8–7
No Communications between Panel and PC (Personal Computer) via USB 8–8
USB Driver Troubleshooting 8–10
No Communications between Panel and PC (Personal Computer) via Ethernet . 8–12
No Communications between Panel and PLC 8–16
IP Address in System Setup Screens displays 0.0.0.0 8–19
Difficulty Connecting to the Panel over the Internet (Web server and Remote Access features) 8–20
PLC Protocol Error Codes 8–21
Touch Panel Runtime Errors 8–22
Panel Constantly Displays “Initializing” when Powering up 8–23
Data not Logging Problems 8–23
Loss of Date/Time and Retentive Data 8–24
Electrical Noise Problems 8–24

The following topics are some of the more likely problems that may be encountered during the installation and operation of your *C-more* touch panel. We have made some suggestions on what to check in order to correct the problem. Please start with the troubleshooting flow chart that covers the more common problems encountered by other users.

Common Problems

The troubleshooting flow chart shown on the following page is based on the more common problems fielded by our technical support team. If you are having problems, please start with the flow chart, follow the suggestions listed, and if you still need help, call our tech support team @ 770-844-4200. In addition to having ready the information suggested in the flow chart, please have the following available:

1) *C-more* touch panel part number including serial number with date code. See page 1-5 in this hardware user manual for an explanation of the part number, serial number, and date code breakdown. Why is this information important? The various sizes of the touch panel use different processors and memory sizes, and therefore can have different types of problems within the particular panel size.

2) Programming software version that you are currently using. For example: Version 2.20 (Please note that software versions 2.0.7.35 and before will also have a build number such as 2.0 Build 07.35). Having the software version number will allow our tech support team member to assess whether there are similar problems that have been reported when using the same version of the software. The programming software version can be found by clicking on "**About C-more Programming Software...**" selection under the **Help** pull down menu in the software. Also, it is always a good practice to visit the **Software/Firmware Downloads** area under the Tech Support section of the ***AutomationDirect*** website and check to see if you are using the latest version of the programming software. If you aren't using the latest software version, we suggest that you upgrade to see if this resolves your problem.

Note: *The* ***"About C-more Programming Software..."*** *dialog box will show a Firmware version on the newer releases of the programming software. This is the current firmware version that is included with the programming software and does not reflect what firmware is actually loaded on your* ***C-more*** *touch panel. See the following for details on how to check the firmware version.*

3) Firmware version of the *C-more* touch panel. For example: 2.0 Build 07.32 or 2.0.07.32. The firmware version can be checked by using the **System Setup Screens**, going to the **Information** menu under the **Main Menu**, and looking under the **General** tab for **Firmware: -Runtime**. The firmware version can also be checked by using the programming software, while connected to the panel, and clicking on the **Panel Information** selection under the Panel pull down menu. As with the programming software version, it is important for our tech support associates to know which firmware version you are using so they can check on any known problems. As with the programming software, we strongly suggest that the firmware be updated to the latest version. Check for the latest version and downlaod from the **Software/Firmware Downloads** area of the ***AutomationDirect*** website.

It is also helpful to have a copy of your project file for our tech support associates to use in troubleshooting a problem, so please be prepared to forward a copy of your project if it is requested.

Toubleshooting Flow Chart

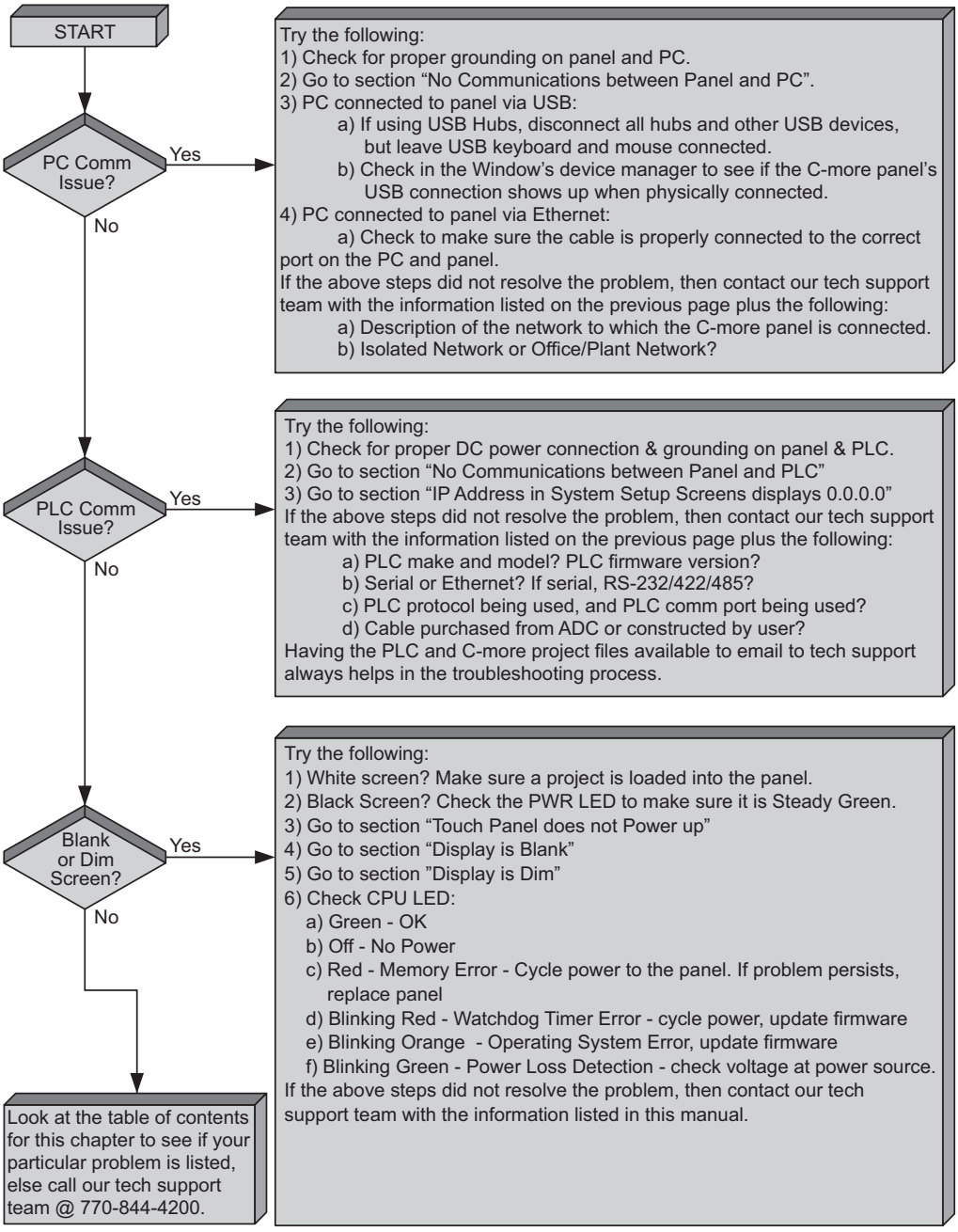

Touch Panel does not Power up

1.) Check the status indicators on the rear of the panel to see if the **Power LED (Green)** indicator is on. Reference the diagram shown below. If the **Power LED (Green)** indicator is on and the panel was observed showing "Initializing..." during power up, but the display is now blank, go to the next troubleshooting tip, **Display is Blank**.

2.) If the **Power LED (Green)** indicator is off and the panel is being powered with a 24 VDC power source, use a voltmeter to check the incoming DC voltage level. The DC voltage level should be in the range of 20.4 to 28.8 VDC. If the incoming DC voltage is zero, check any fusing that may be in the circuit. If the fuse is open, determine cause and replace. If the DC voltage level is out of range, the DC power source needs to be corrected or replaced.

3.) If the **Power LED (Green)** indicator is off and the panel is being powered with an AC/DC Power Adapter, EA-AC, use a voltmeter to check the incoming AC power. The AC voltage to the AC/DC Power Adapter should be in the range of 100 to 240 VAC, 50/60 Hertz. If the incoming AC voltage is zero, check any fusing that may be in the circuit. If the fuse is open, determine cause and replace. If proper AC voltage is present on the AC/DC Power Adapter, but the **Power LED (Green)** indicator is off, replace the AC/DC Power Adapter, EA-AC.

C-more LED Status Indicators

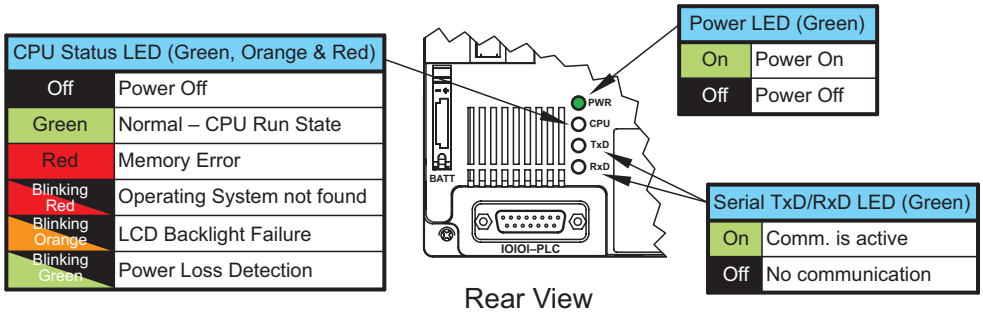

Display is Blank

1.) Touch the screen to make sure the panel is not in the **Screen Saver** mode.

- The **Screen Saver** will be turned off and the panel screen will display:
  - If a **PLC Address** is configured to control the **Screen Saver** and changes from **On** to **Off**.
  - When the panel touchscreen is touched.
  - When the screen is clicked by **Remote**.
  - When the **Alarm Event** of the **Event Manager** occurs. (Only when the **Display** setting of the **Alarm Event** is checked).
  - When there is a screen change by the **PLC**.
  - When an **Error** such as a **Communication Error** occurs.

2.) If the panel is not in **Screen Saver** mode, check the status indicators on the rear of the panel.

C-more LED Status Indicators

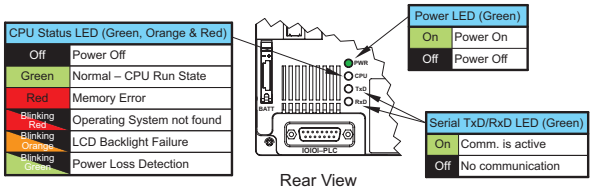

Rear View

- The **Power LED** (**Green**) should be on. If not, check the incoming power as explained in the "Touch Panel does not Power Up" section.
- Make sure the **CPU** status **LED** (**Green, Orange, Red**) is a **steady Green**.
- A **blinking Orange** colored **CPU** status **LED** indicates a failed LCD display backlight. The backlights are user replaceable on the 8", 10", 12" and 15" ***C-more*** touch panels with LCD display backlights. LED display backlights are not user replaceable. See **Chapter 9: Replacement Parts** for additional information on replacement backlights.
- If the **CPU** status **LED** is **blinking Green**, then the supply voltage is below 19.2 VDC, or below 100 VAC when using the optional ***C-more*** AC/DC Power Adapter, EA-AC. The backlight will turn off immediately to extend the power retention period. The panel will continue to run and the LCD display will be slightly visible. This may be seen as the display being dim, so it is advisable to check the incoming voltage. The panel does not turn off until the DC voltage drops below 5 VDC or below 58 VAC when using the AC/DC Power Adapter, EA-AC.
- A **blinking Red CPU** status **LED** indicates that the operating system could not be found. Reload the firmware to the touch panel. If this does not resolve the problem, contact the ***AutomationDirect*** returns department @ 1-800-633-0405 to make arrangements for returning the unit for repair.

Display is Blank continued on next page.

3.) There is always the remote possibility that a project has been transferred to the touch panel that includes a screen that uses a black background and has no objects placed on the screen. To check for this possibility, access the **Main Menu** of the touch panel **System Setup Screens** by pressing the extreme upper left corner of the panel display area for three (3) seconds as shown below. If the **System Setup Screen's Main Menu** is displayed, then most likely an empty black background screen is being displayed.

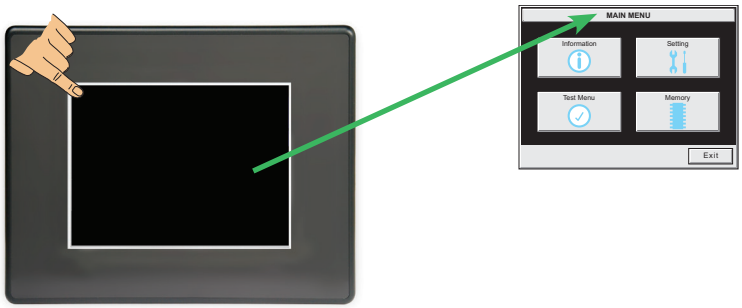

Display is Dim

1.) Check either the contrast or brightness setting found under the System Setup Screens. Keep in mind that the STN type display models can have the contrast adjusted. The TFT type display models can have the brightness adjusted. See **Chapter 5: System Setup Screens** for additional information.

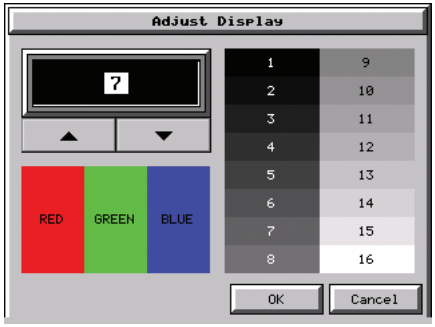

2.) Backlights will slowly lose some luminance causing the display to slightly dim. The backlight average lifetime is rated at 50,000 hours and is defined as the average usage time it takes before the brightness becomes 50% of the initial brightness. The lifetime of the backlight depends on the ambient temperature; the lifetime decreases in low or high temperatures. To improve the backlight life, use the **Start Screen Saver** function that is available in the ***C-more*** Programming Software in the Panel Manager dialog box. The backlights are user replaceable on the 8", 10", 12" and 15" ***C-more*** touch panels with LCD display backlights. LED display backlights are not user replaceable. See **Chapter 9: Replacement Parts** for additional information on the replacement backlights.

Display is Dim continued on next page.

- The **Screen Saver** will be turned off and the panel screen will display:
  - If a **PLC Address** is configured to control the **Screen Saver** and changes from **On** to **Off**.
  - When the panel touchscreen is touched.
  - When the screen is clicked by **Remote**.
  - When the **Alarm Event** of the **Event Manager** occurs. (Only when the **Display** setting of the **Alarm Event** is checked).
  - When there is a screen change by the **PLC**.
  - When an **Error** such as a **Communication Error** occurs.

3.) Another condition that may make the display appear dim is to view the touch panel in direct sunlight or in a location where direct light is reflected onto the display. The ***C-more*** touch panel displays have **Display Brightness** ratings of 150 to 300 cd/m^2 (NITS), depending on the particular model. The higher the cd/m^2 (NITS) rating, the more visible the display will be under bright lighting conditions.

No User Program

If the touch screen is displaying the message "No User Program" after it has powered up, then either:

- the built-in Flash memory does not contain a recognized project, or
- a CompactFlash memory card is plugged into the CF1 slot and there is no project on the CompactFlash memory card. Turn the power off, remove the CompactFlash memory card and turn the power back on.

Keep in mind that on power up, the touch panel will either copy the project from its internal Flash memory to its internal SDRAM memory and run the project, or if a CompactFlash memory card is plugged into the CF1 slot, then any project contained on the CF memory card will be copied to the panel's internal SDRAM memory and be run. In other words, the memory of a CompactFlash card on CF1 will override the panel's internal Flash memory on power up or reboot, even if the CompactFlash memory card does not contain a project.

No Communications between Panel and PC (Personal Computer) via USB

The *C-more* touch panel is programmed using the *C-more* Programming Software, EA-PGMSW. The developed project is transferred from the PC to the touch panel by either a USB or an Ethernet connection between the two. (Ethernet available on full feature units only.)

If using USB, then a USB type AB programming cable, such as p/n USB-CBL-AB15, should be used to make a connection between the panel's USB Port, Type B and a USB port on the PC. The *C-more* Programming Software will install a USB driver on the PC during the software installation.

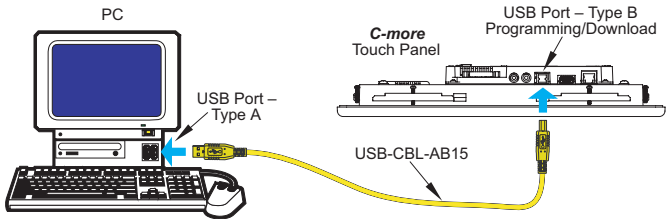

If the USB connection to the panel is recognized by the PC, you will hear the Windows device-recognized-sound when the powered panel is connected to the PC. The driver will appear in the Windows Device Manager as **C-more HMI**.

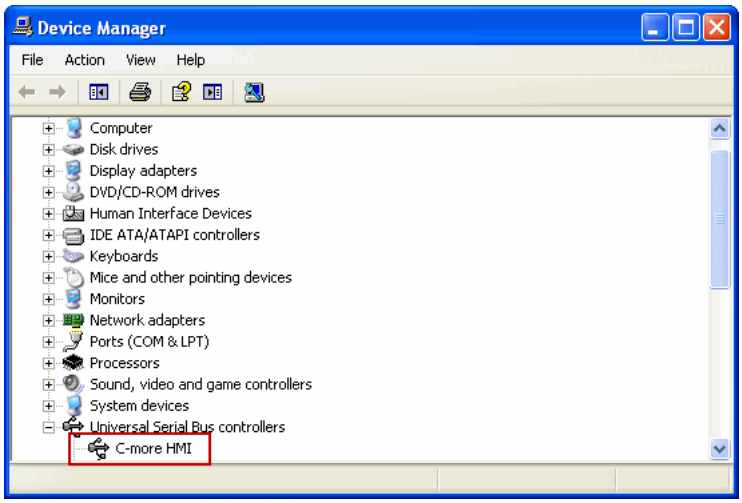

No Communications between Panel and PC (Personal Computer) via USB (cont'd)

The *C-more* software will then identify the USB connection with a green indicator.

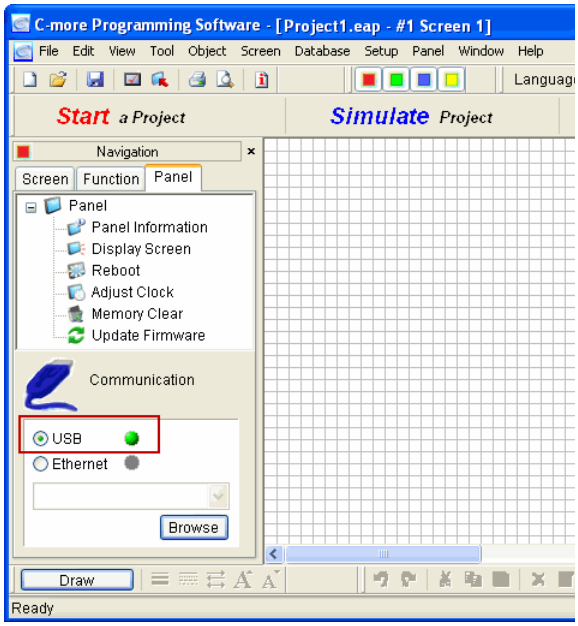

This Communication indicator appears on the Panel tab in the Navigation window and in the Project Transfer or Read from Panel windows.

USB Driver Troubleshooting

When transferring a project to the panel using the Send Project to Panel function, if the USB radio button in the Step 3 - Project Transfer dialog box, is DIMLY green, then although the PC recognizes the panel, there is interference in the communication. If a PLC is connected to the serial port of the panel, try disconnecting it. If this corrects the problem, then check your grounding for the PLC and the panel.

Check the USB driver using Windows Device Manager:

With the *C-more* panel connected to the PC, on the PC, open **Control Panel--> System -->Hardware tab --> Device manager**. Next expand "Universal Serial Bus controllers". The *C-more* driver is named **C-more HMI** as shown below:

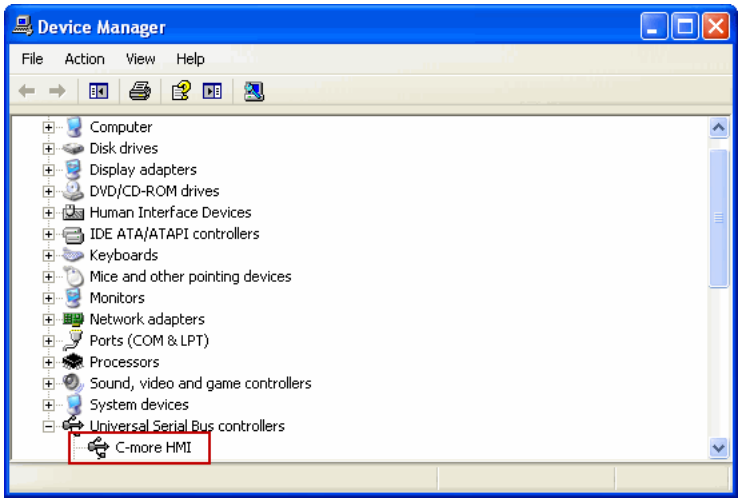

If the *C-more* programming software Communication Config dialog USB indicator is red, and the driver does not appear in Device Manager,

1) Unplug both end of the cable and replug them in.
2) If that does not establish communication, plug into a different USB port on the PC.
3) If there are any USB hubs or other devices being used, temporarily eliminate them to see if this solves the problem.
4) Reinstall the C-more HMI USB driver.

USB Driver Troubleshooting (cont'd)

The *C-more* USB driver installation utility is bundled with the *C-more* software installation files. If you have a *C-more* software CD, the file is in the root, called **C-moreUSBDriver.exe**.

If you downloaded the software, when you extracted the files, the **C-moreUSBDriver.exe** was extracted to the location you chose. First, close the *C-more* software and disconnect the USB cable from the PC. Then, browse to **C-moreUSBDriver.exe** and run it.

If your OS is Windows XP, You will get this warning :

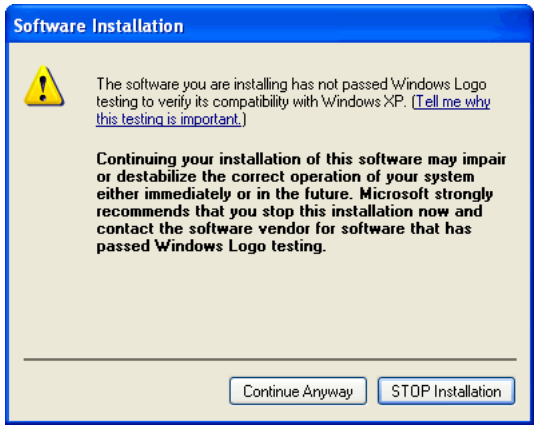

Click **Continue Anyway** and InstallShield will install the driver. Click **Finish** in the Update Complete window.

Plug the USB cable into the PC and the *C-more* panel.

The Found New Hardware Wizard will prompt you to search for the driver. Select "No not this time" , click **Next**. Select "Install the Software automatically (Recommended)" click **Next**. Click **Continue Anyway** in the Windows Logo warning popup. Click **Finish**.

Open the project in the *C-more* software. The Communication Config (and Transfer Project) USB indicator should be green.

No Communications between Panel and PC (Personal Computer) via Ethernet

When using an **Ethernet** connection to communicate between the touch panel and the PC and the communications does not seem to be working, the first area to check is the Ethernet status indicators located next to the **10/100 Base-T Ethernet Port** on the rear of the panel. The **Link Status LED** must be displaying a **Steady Green**.

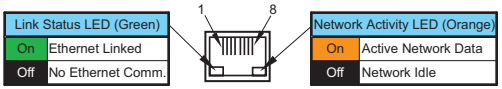

If using an **Ethernet** connection to program the touch panel, there are two basic ways to make the connection. You can use a "crossover" **Ethernet** cable to make a direct connection between

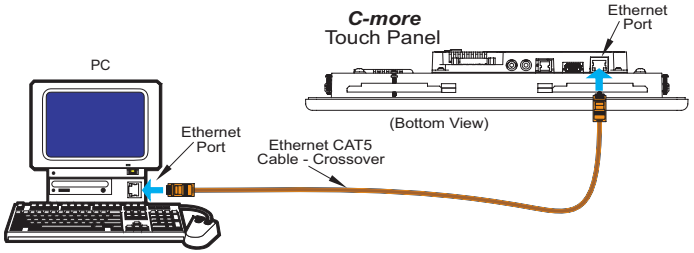

the touch panel and the PC or a "straight-thru" **Ethernet** cable from the touch panel to a hub, switch, etc. that is also connected to the PC.

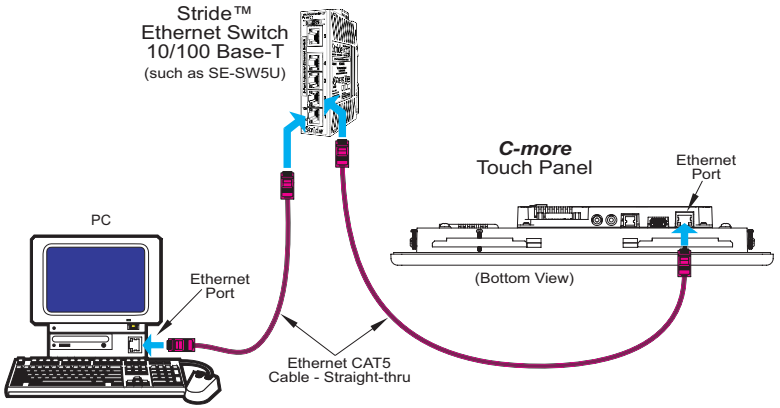

Use the *C-more* programming software to check the status of the **Ethernet** communications. From the **Navigation** window, select the **Panel** tab. At the bottom of the **Panel** tab is the **Communication Config** dialog box. Select the **Browse** button. If the connection is working the panel will be listed in the online link list. Select the panel and then select OK. If the **Ethernet** communications to the panel is working, then the **Ethernet** radio button should be checked and there should be a "green" indicator next to the **Ethernet** selection. There should also be an **IP Address** shown in the browse box below the **Ethernet** selection. If the **Ethernet** radio button is "red", then you will need to check your **Ethernet** cables and connections or **Browse** for the panel.

No Communications between Panel and PC (Personal Computer) (cont'd)

There can also be a conflict with another Ethernet connection that may be using the same **IP Address**. You may want to check the setup both in the touch panel and also in your PC. As a starting point, it is best to start with an assigned IP Address and Subnet mask, mainly to eliminate IP addressing conflicts. Use the ***C-more*** programming software and open the **Touch Panel Network** dialog box under the **Main Menu's Setup** drop down menu. Click on the **Ethernet Port** tab to display the dialog box used to set up the touch panel's **Ethernet** port.

Another cause of an Ethernet communications problem that may be encountered, is the touch panel doesn't show up in the node list, which can be caused by the PC having a firewall.

The figure below shows the **Touch Panel Network** dialog box with the **Ethernet** port tab opened. The **Save settings to Project** check box is checked and we are using the **Use the following IP Address** selection by checking its radio button. **The subnet (192.168.X.X) and the subnet mask (255.255.0.0) must be the same for both the panel and the PC.** See the ***C-more*** programming software on-line help for additional details regarding the **Touch Panel Network.**

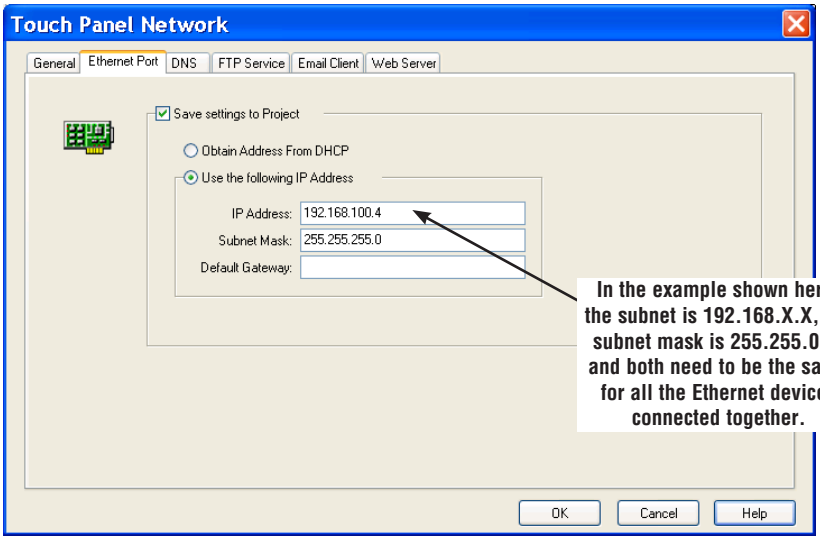

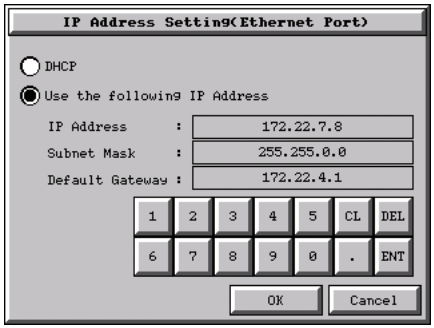

The **IP Address** assigned to the touch panel can also be checked or edited by using the system setup screens built into the touch panel. See **Chapter 5: System Setup Screens** for additional information.

The figure below shows a different example of the panel's **System Setup Screens' Ethernet Port** dialog box for configuring the **Ethernet** port. Again, make sure the subnet (172.22.X.X) and subnet mask (255.255.0.0) is the same for both the panel and the PC.

No Communications between Panel and PC (Personal Computer) (cont'd)

Another option for accessing the **IP Address** assigned to the touch panel is to use the *C-more* Programming Software. Open the **Navigation** window's **Panel** tab and click on the **Browse** button under the **Communication** window at the bottom. This will open the **Ethernet Connection Setup** window. The **Online Link List** tab will show all of the connected panels. If none are shown, try clicking the **Browse Network** button to search for attached devices. Double click on the **Panel Name** you want to access and this will bring up the **Change IP Address** window. In this window changes can be made to the panel's name, IP address, subnet mask, and default gateway.

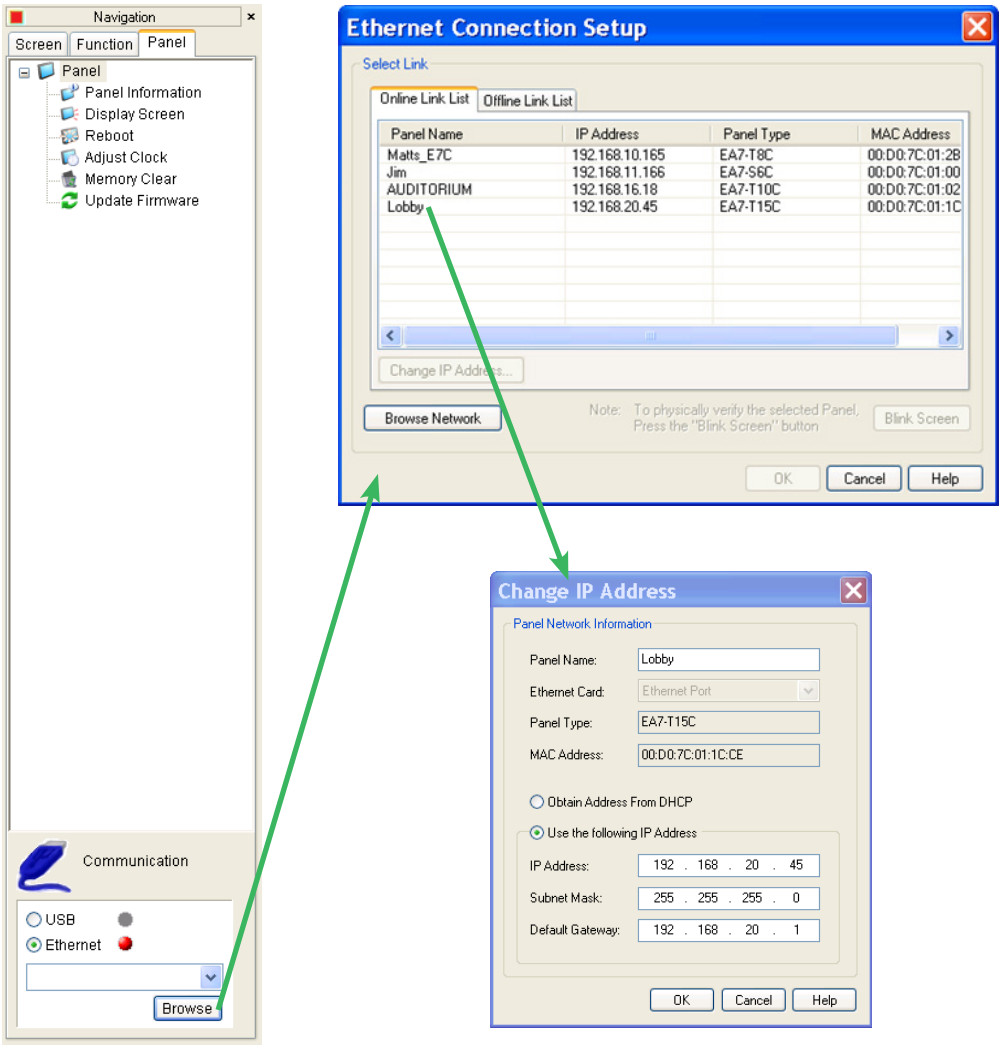

No Communications between Panel and PC (Personal Computer) (cont'd)

Check the **IP Address** setting of the PC by opening the Windows operating system's **Control Panel** and then selecting the **Network Connections** utility. Click on **Properties**, scroll down to **Internet Protocol** (TCP/IP) and click **Properties**. The **Internet Protocol** (TCP/IP) **Properties** dialog box will open. Again, make sure the **Subnet Mask** is set the same for both the panel and the PC and also make sure that the **IP Addresses** do not conflict.

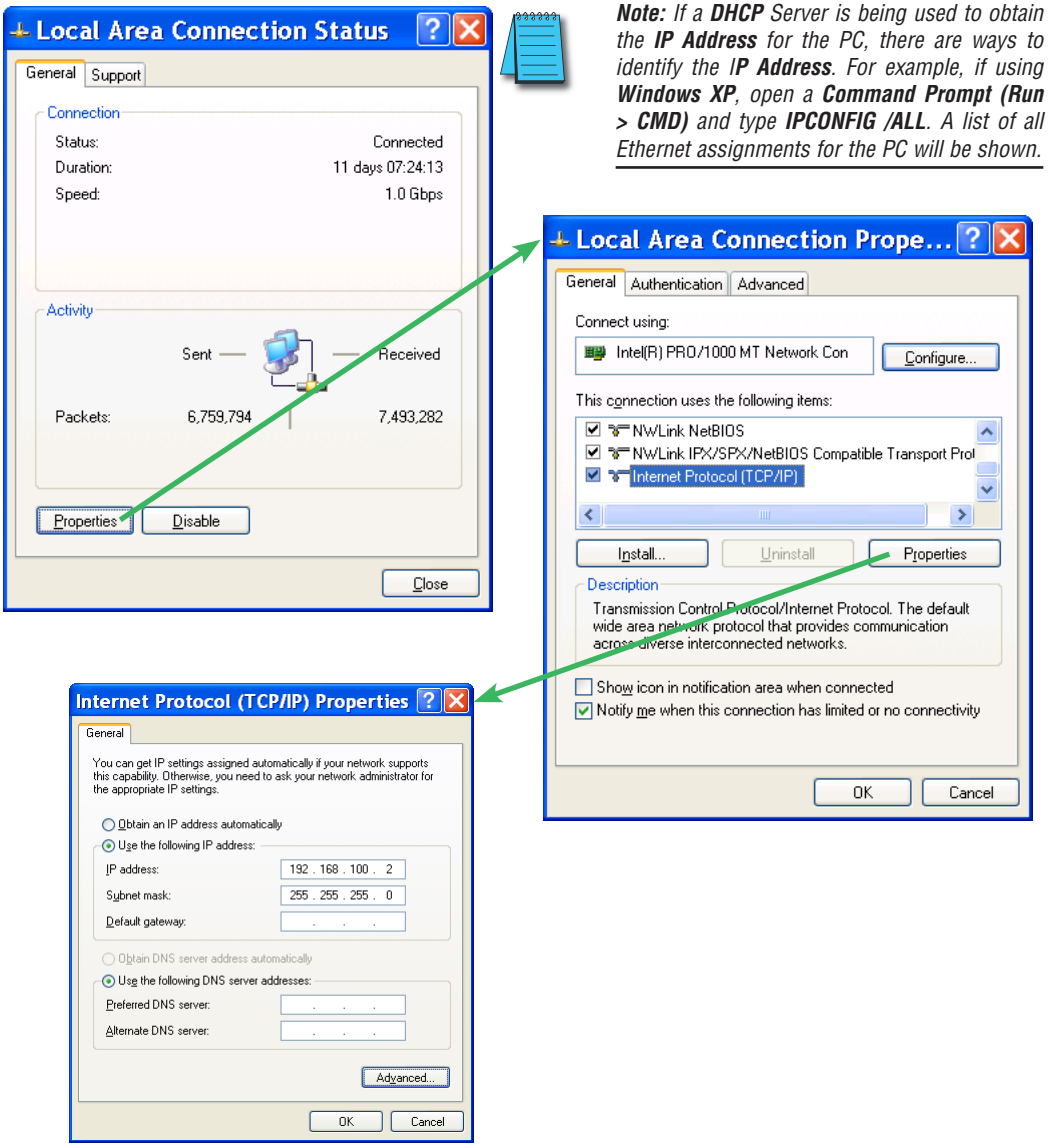

***Note:** If a **DHCP** Server is being used to obtain the **IP Address** for the PC, there are ways to identify the **IP Address**. For example, if using **Windows XP**, open a **Command Prompt (Run > CMD)** and type **IPCONFIG /ALL**. A list of all Ethernet assignments for the PC will be shown.*

No Communications between Panel and PLC

The communications between the ***C-more*** touch panel and designated PLC or controlling device can be accomplished by either a serial connection to the panel's **15-pin PLC Communications Port** or by an **Ethernet** connection to the panel's **10/100 Base-T Ethernet Port**. (Ethernet available on full feature units only.)

1.) If the touch panel and PLC are connected serially and the communications have seemed to stop working, then first check the **TxD** and **RxD** status indicators on the rear of the panel for activity.

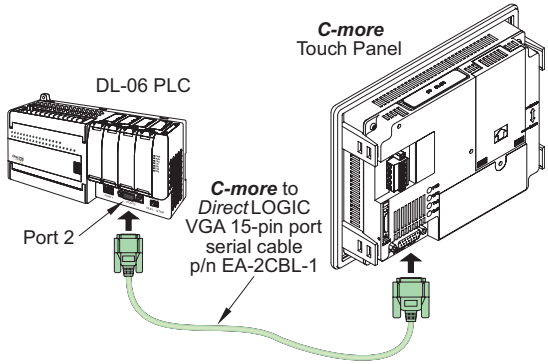

If there is no activity on one or both the **TxD** and **RxD** status indicators, then it should be suspected that either:

- serial comm port settings are incorrect
- the cable is bad and needs to be replaced
- the serial port on the panel is defective
- the PLC serial port is bad

CPU Status LED (Green, Orange & Red)	
Off	Power Off
Green	Normal – CPU Run State
Red	Memory Error
Blinking Red	Operating System not found
Blinking Orange	LCD Backlight Failure
Blinking Green	Power Loss Detection

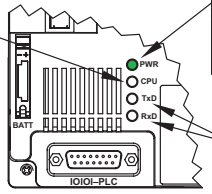

Power LED (Green)	
On	Power On
Off	Power Off

Serial TxD/RxD LED (Green)	
On	Comm. is active
Off	No communication

Rear View

The status indicators will show activity whether the serial communications is wired for RS-232 or RS-422/485.

Electrical noise, pulse generating wiring and/or improper grounding can also cause problems with communications. Refer to the **Electrical Noise Problems** section on page 8-17 for additional help.

(**Serial** connections between the touch panel and PLC continued on next page.)

No Communications between Panel and PLC (cont'd)

The serial port on the *C-more* touch panel can be tested using the panel's system setup screens. Access the **Main Menu** of the panel's system setup screens, press the **Test Menu** button and then press the **Test Comm. Port** button. You will need to fabricate a **Loop Back Connector** for the type of serial connection that is being used in your application, either RS-232 or RS-422/485, per the wiring diagrams shown below. Plug the loop back connector into the panel's 15-pin PLC serial communications port and then press the **Loop Back Test** button to run the test. See **Chapter 5: System Setup Screens** for additional information.

Loop back connector wiring diagrams:

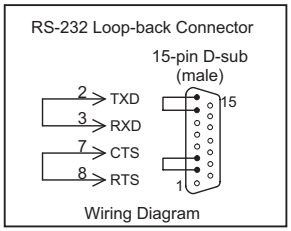

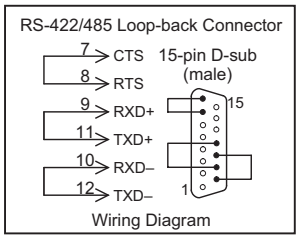

System setup screens **Test Comm. Port** dialog boxes:

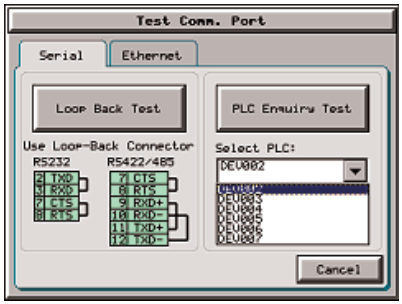

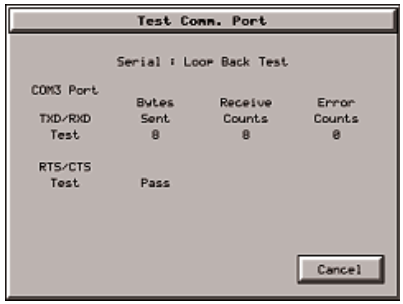

The **PLC Enquiry Test** can also be performed to determine if the **Ethernet** communication is working correctly between the panel and designated PLC .

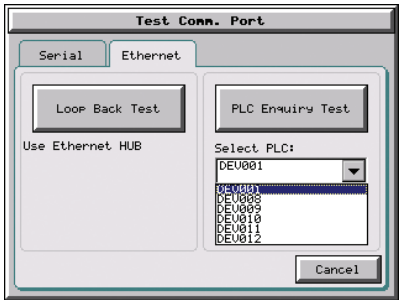

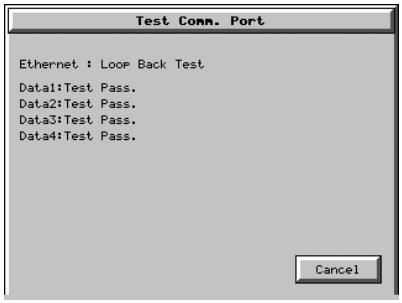

(**Ethernet** connections between the touch panel and PLC continued on next page.)

No Communications between Panel and PLC (cont'd)

2.) If using an **Ethernet** connection between the touch panel and the PLC, and there is a problem with the communications, the first area to check is the **Ethernet** status indicators located next to the **10/100 Base-T Ethernet Port** (shown below) on the rear of the panel.

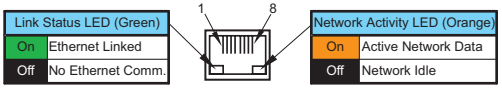

There are two basic ways to make the connection. You can use a crossover **Ethernet** cable (shown below) to make a direct connection between the touch panel and the PLC or a

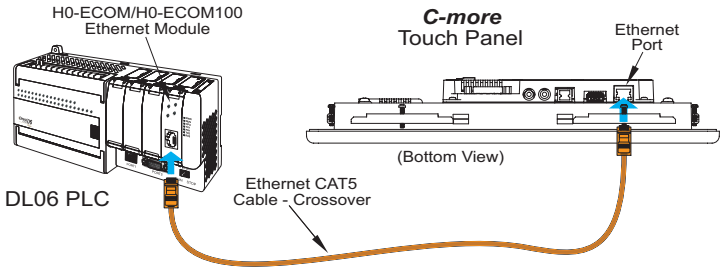

regular **Ethernet** cable (shown below) from the touch panel to a hub, switch, etc. that is also connected to the PLC.

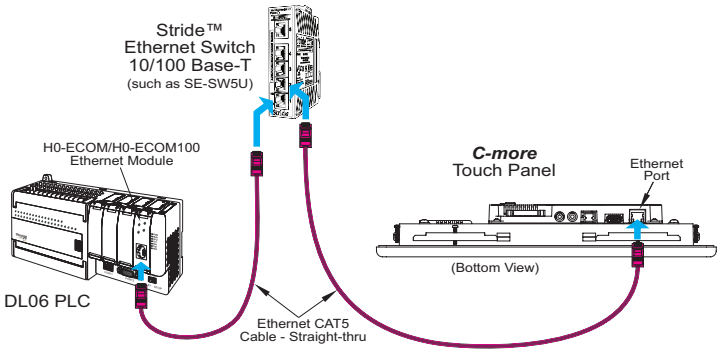

Check the status indicators that may be included with the **Ethernet** communications module or device that is part of the PLC. Refer to the PLC's Ethernet user manual for further troubleshooting information.

(**Ethernet** connections between the touch panel and PLC continued next page.)

No Communications between Panel and PLC (cont'd)

The **Ethernet** port on the *C-more* touch panel can be tested by using the panel's system setup screens. Access the **Main Menu** of the panel's system setup screens, press the **Test Menu** button and then press the **Test Comm. Port** button. Select the Ethernet tab in the Test Comm. Port dialog box, make sure the Ethernet port is connected to an Ethernet hub or other Ethernet communications device, and then press the **Loop Back Test** button to run the test. See **Chapter 5: System Setup Screens** for additional information.

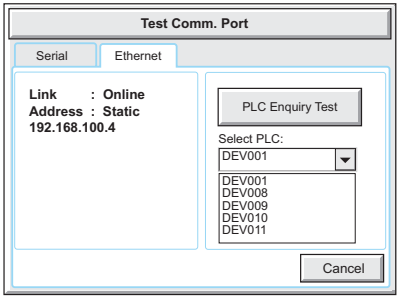

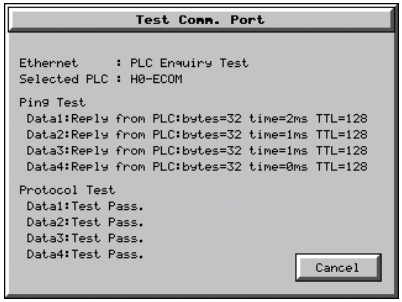

If a PC running the *C-more* programming software is connected to the **Ethernet** network that is also connected to both the touch panel and PLC, then certain functions in the software, such as the **Main Menu's Setup** drop down selection for **Panel Manager** or **Touch Panel Network** and the **Main Menu's Panel** drop down selection for **Panel Information**, can be used to help troubleshoot problems with the touch panel's communications and operation. See the *C-more* programming software's on-line help for additional information.

IP Address in System Setup Screens displays 0.0.0.0

Note: *If entering an* ***IP Address*** *for the* ***C-more*** *touch panel using the* ***System Setup Screens****, and the IP Address keeps displaying 0.0.0.0, even after entering an IP address, the panel is not functionally connected to an active network. Either the cable, hub, or switch is bad. The entered* ***IP Address*** *is stored in the panel's memory, but won't show up until a good connection is established. Keep in mind that if in the* ***C-more*** *programming software's* ***Touch Panel Network*** *dialog box, under the* ***Ethernet Port*** *tab, you have checked the* ***Save settings to Project*** *check box and have entered an* ***IP Address*** *of 0.0.0.0, then anytime the project is transferred to the panel, the panel's* ***IP Address*** *will be overwritten with the entered address.*

Difficulty Connecting to the Panel over the Internet (Web server and Remote Access features)

1) Refer to the software help file topics **Touch Panel Network** and **Remote Access Setup** for information on configuring the Remote Access accounts, the Web Server Function and the panel IP Attributes.
2) In the Ethernet Port tab if DHCP is selected for assigning the IP address, verify the currect address of the panel. The IP address assigned by DHCP may change over time.
3) Note that the Web Server Function must be enabled on the Web Server tab before the Remote Access Server Function can be accessed on the panel.
4) Verify that the correct TCP ports have been opened on the router controlling access to the network where the ***C-more*** panel resides.
5) If two ***C-more*** panels are on a network behind a firewall and they have the same **Remote Access port number**, the router will use the first entry in the Port Forwarding setup that it encounters. The same ***C-more*** panel will always come up even if the two panels have two different Web Server Port numbers.
6) When entering the URL in Internet Explorer to connect the ***C-more*** web server using a port number other than the default (80), be sure to use the full URL text including the prefix "http://". The URL should be http://xxx.xxx.xxx.xxx:aaaaa where xxx.xxx.xxx.xxx is the IP address of the panel and aaaaa is the port number configured in the Web Server tab of the Touch Panel Network setting.

PLC Protocol Error Codes

The *C-more* touch panel includes built-in PLC communication protocol diagnostics that monitor the exchange of data between the panel and the PLC. The diagnostics look for the proper exchange of data, correct handshaking signals, addressing errors, incorrect data bytes, wrong packet format, etc. The diagnostics also monitor and report any of the errors that the designated PLC would normally generate if there is a problem with the PLC's communications. Each brand of PLC has its own unique set of diagnostic errors that are typically communicated over the PLC's communications port. The PLC generated errors are interpreted by the *C-more* software. See the PLC manufacturer's user manuals for additional details on the designated PLC's errors.

If a *C-more* communications error does occur, the error message will be displayed in the upper left of the *C-more* screen and the **Error Code** is recorded in the panel's error log. If a PLC error occurs, the PLC error code number will appear across the top of the screen, the PLC error message may not be included in some cases. The error log can be viewed using the system setup screens. See **Chapter 5: System Setup Screens** under the **Information** window to bring up the **Error** tab which includes a description of the logged data.

A detailed list and description of the various PLC protocol errors can be found in **Appendix A: PLC Protocol Error Codes**.

Error Codes for *Direct*LOGIC – K-Sequence		
Error Code	**Error Message**	**Description**
PLC-001	PLC Communication Timeout (for single PLC) %Device% PLC Communication Timeout (for multiple PLCs, such as RS-422/485)	A timeout occurred after sending a request to the PLC %Device%. %Device% indicates the device name, such as DEV001. Example error message for multiple PLCs: DEV001 PLC Communication Timeout
PLC-002	NAK received from PLC	A negative acknowledgement (NAK) control code has been generated during a read/write request.
PLC-004	STX is not found	A Start of Text (STX) control code was not found in the data packet received from the PLC.

PLC Protocol Error Codes example:

Touch Panel Runtime Errors

The *C-more* touch panel includes built-in diagnostics that check for proper operation of the panel when it is running a project that has been transferred to its memory. Faults detected while the panel is running will produce a "Runtime" error. These errors are displayed in the upper left of the panel's display and are also recorded in the panel's error log. The error log can be viewed using the system setup screens. See **Chapter 5: System Setup Screens** under the **Information** window to bring up the **Error** tab which includes a description of the logged data.

A detailed list and description of the various touch panel runtime errors can be found in **Appendix B: Touch Panel Runtime Errors**.

No.	Error Log Code	Error Message Located at upper left of screen	Error Message Tag	Tag Error Code Value	System Screen Info > Error	Cause
Log Error						
1	RTE-001	Log Failed. Not enough Memory Space in %Device%	SYS ERR ERRORCODE	2001	MM/DD/YY HH/MM/SS Error Code RTE-001	The size of the destination memory is not large enough to store the data.
2	RTE-002	Log Failed. %Device% cannot be found	SYS ERR ERRORCODE	2002	MM/DD/YY HH/MM/SS Error Code RTE-002	No device available or the device is defective.
Battery						
1	RTE-031	Low Battery	SYS ERR ERRORCODE	2031	MM/DD/YY HH/MM/SS Error Code RTE-031	The panel's backup battery voltage level has fallen below 1.8 VDC and should be replaced.

Touch Panel Runtime Errors example:

Panel Constantly Displays "Initializing" when Powering up

If the touch panel constantly displays a message reading "Initializing" while powering up, then check the following possible causes.

1.) ***C-more*** supports USB 1.0 and 1.1 memory devices. Ensure that the USB device is 1.0 or 1.1 or backward compatible to support version 1.1

2.) The project that is loaded into the panel's internal SDRAM memory is corrupted. Either use the ***C-more*** programming software to clear the panel's memory and re-transfer the project to the touch panel, or press the upper left corner of the touch panel screen while powering up to bypass the project and go directly to the **System Setup Screen** menu. Select the **Memory** menu, and use either the **Clear Memory** or **Set to Factory Default** utility to clear the panel's memory and re-transfer the project to the touch panel.

3.) A CompactFlash memory card has been plugged into the CF1 slot and the CompactFlash either has no project stored on it or the project is corrupted. Remove the CompactFlash memory card form the CF1 slot and either load the project to the panel's internal Flash memory, or use a CF card reader connected to a PC to clear and re-format the CompactFlash card, or try a different CompactFlash memory card.

Note: *In the Error Log you may find the error RTE-500 - Check Sum Error, which is defined as "Memory in the panel has been corrupted by power loss, etc." If this is the case, try cycling power to the panel, re-transfer the project to the panel, and re-transfer the firmware, etc. in sequential steps to try to correct the problem.*

Data not Logging Problems

If the data log is missing entries, or a Runtime Error for the Log Errors as shown in **Appendix B: Touch Panel Runtime Errors** is seen, then check the following possible causes.

1.) Check that the memory devices, that were selected for **Data Storage** under the ***C-more*** programming software's **Main Menu - Setup** drop down - **Panel Manager** dialog box, are plugged into their proper location. Alarms, messages and screen captures can be independently selected to be saved to either a USB pen drive plugged into the USB Port - Type A, or a CompactFlash memory card plugged into CF1 or CF2. (Full feature units only.)

2.) The memory device could be bad. If possible, check it by plugging it into a PC that has the ability to access the memory device. Also, not all USB devices are compatible with the ***C-more*** touch panels. Check **System Screen**, **Memory** for the presence of the USB device inserted.

Loss of Date/Time and Retentive Data

If power is cycled to the *C-more* touch panel and it is then noticed that either the **Date/Time** of the panel is no longer correct, or any data that has been setup to be retentive is inaccurate, most likely the backup battery is exhausted and needs to be replaced. See **Chapter 9: Replacement Parts** for additional information on replacing the panel's battery.

D2-BAT-1

CAUTION - The battery used in this device may present a risk of fire or chemical burn if mistreated. Do not recharge, disassemble, heat above 100 °C (212 °F) or incinerate. Replace battery with AutomationDirect part number D2-BAT-1 or CR2354 only. Use of another battery may present a risk of fire or explosion. Dispose of used battery properly. Keep away from children.

Perchlorate Material, special disposal handling may apply

Electrical Noise Problems

Noise is one of the most difficult problems to diagnose. Electrical noise can enter a system in many different ways which fall into one of two categories, conducted or radiated. It may be difficult to determine how the noise is entering the system but the corrective actions for either of the types of noise problems are similar.

- Conducted noise is when the electrical interference is introduced into the system by way of an attached wire, panel connection, etc. It may enter through a power supply connection, the communication ground connection, or the chassis ground connection.
- Radiated noise is when the electrical interference is introduced into the system without a direct electrical connection, much in the same manner as radio waves.

While electrical noise cannot be eliminated, it can be reduced to a level that will not affect the system.

- Most noise problems result from improper grounding of the system. A good earth ground can be the single most effective way to correct noise problems. If a ground is not available, install a ground rod as close to the system as possible. Ensure all ground wires are single point grounds and are not daisy chained from one device to another. Ground metal enclosures around the system. A loose wire can act as a large antenna, introducing noise into the system. Therefore, tighten all connections in your system. Loose ground wires are more susceptible to noise than the other wires in your system. Review **Chapter 4: Installation & Wiring** if you have questions regarding how to ground the touch panel.
- Electrical noise can enter the system through the power source for the touch panel. Installing a properly wired isolation transformer (neutral grounded) for all AC sources can help the problem, but only if wired correctly. DC sources should be well-grounded good quality supplies.
- Never run communication cables or low-voltage power wiring close to high voltage wiring or pulse generating wiring that controls such devices as solenoids, servos, VFOs, etc.

Chapter 9
Replacement Parts

In This Chapter...

Replacement Parts Overview 9–2
Replacement Parts at a Glance 9–2
Battery Replacement & Installation Instructions 9–3
6″ Panel Mounting Clip Replacements & Installation 9–5
8-15″ Panel Mounting Clip Replacements & Installation 9–6
DC Panel Power Connector Replacement 9–7
AC Power Adapter Connector Replacement 9–7
8-15″ Panel Backlight Bulb Replacements & Installation 9–8
6-15″ Panel Gasket Replacement & Installation 9–11
8-15″ Panel Bezel Replacement & Installation 9–12
6″ Adapter Plate Gasket Replacement & Installation 9–14

Replacement Parts Overview

Part Number	Description	Part Number	Description
D2-BAT-1	Battery Replacement	EA-12-GSK	12” Panel Gasket Replacement
EA-BRK-1	6” Panel Mounting Clip Replacements (2 per pk.)	EA-10-GSK	10” Panel Gasket Replacement
EA-BRK-2	8-15” Panel Mounting Clip Replacements (8 per pk.)	EA-8-GSK	8” Panel Gasket Replacement
EA-DC-CON	DC Panel Power Connector Replacement	EA-6-GSK	6” Panel Gasket Replacement
EA-AC-CON	AC Power Adapter Connector Replacement	EA-15-BEZEL	15” Panel Bezel Replacement
EA-15-BULB* EA-15-BULB2*	15” Panel Backlight Bulb Replacement	EA-12-BEZEL	12” Panel Bezel Replacement
EA-12-BULB* EA-12-BULB2*	12” Panel Backlight Bulb Replacement	EA-10-BEZEL	10” Panel Bezel Replacement
EA-10-BULB* EA-10-BULB2*	10” Panel Backlight Bulb Replacement	EA-8-BEZEL	8” Panel Bezel Replacement
EA-8-BULB* EA-8-BULB2*	8” Panel Backlight Bulb Replacement	EA-6-ADPTR-GSK	6” Adapter Plate Gasket Replacement
EA-15-GSK	15” Panel Gasket Replacement		

Note - See section 8-15” Panel Backlight Bulb Replacements in this chapter for correct replacement bulb.

9

Replacement Parts at a Glance:

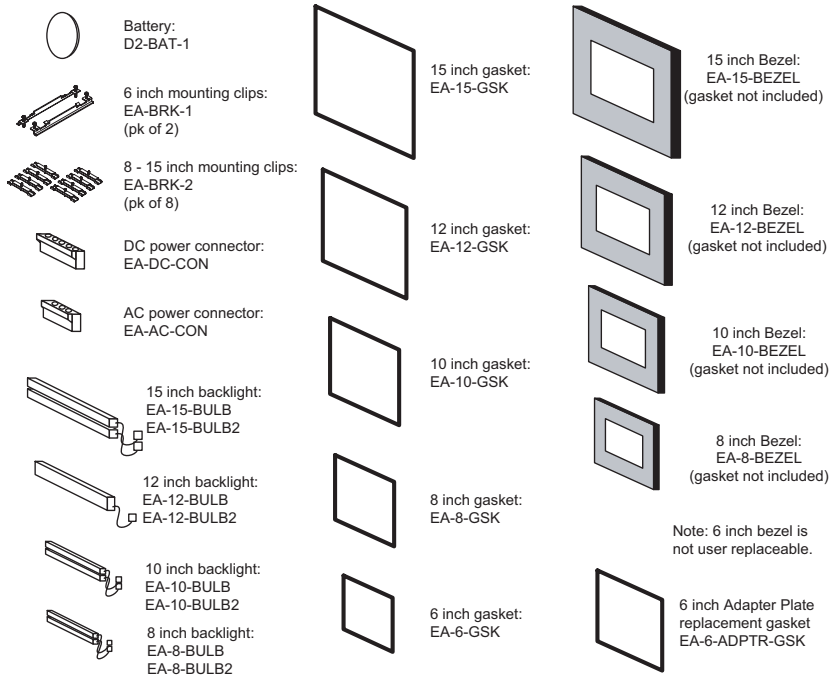

Battery Replacement – D2-BAT-1

CAUTION - The battery used in this device may present a risk of fire or chemical burn if mistreated. Do not recharge, disassemble, heat above 100 °C (212 °F) or incinerate. Replace battery with AutomationDirect part number D2-BAT-1 or CR2354 only. Use of another battery may present a risk of fire or explosion. Dispose of used battery properly. Keep away from children.

Perchlorate Material, special disposal handling may apply

The *C-more* touch panels are supplied with a SRAM retentive memory backup battery that also is used to backup the internal CPU date/time registers. The battery should be replaced every 5 years or during any routine maintenance to the touch panel. As a note, the battery used in the *C-more* touch panels is the same battery that is used for backup in ***AutomationDirect's*** DL06, D2-250(-1), D2-260 and D3-350 PLCs.

Battery Replacement Instructions:

NOTE: *The lithium battery in your panel is used to maintain the system* ***SRAM*** *retentive memory and the CPU date/time registers when the unit is without external power. Before replacing the battery, back-up the data in your* ***SRAM*** *retentive memory as a precaution. Input power needs to be maintained to the panel during battery replacement. Typical battery life is five years, which includes panel runtime and normal shutdown periods. However, consider installing a fresh battery if your battery has not been replaced recently and the unit will be without power for a period of more than ten days.*

9

Preparation: If the touch panel is not mounted in or has been removed from a control cabinet, then it is recommended the panel be placed face down on a lint-free soft surface to prevent scratching the front of the panel. The battery door is located on the rear just below and to the left of the DC Power Connector.

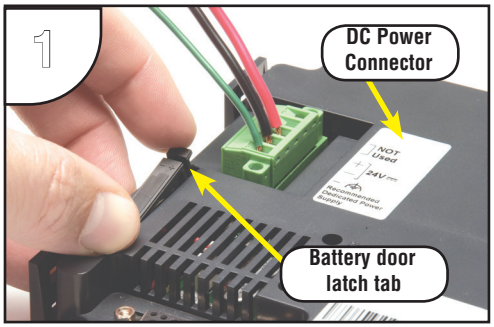

Open the battery holder door by pressing down on the upper latch tab while lifting upward and rotating the door in a downward motion. The battery door will pivot toward its bottom hinge point.

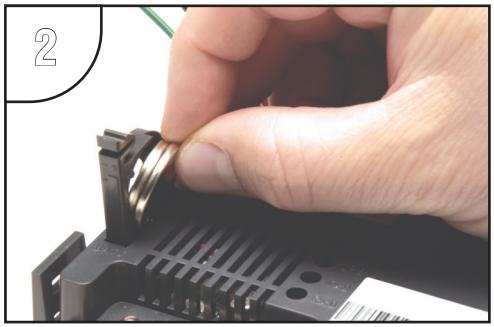

The coin cell style battery is located in the battery holder. To remove the battery, use the slot in the top of the holder to pry the battery away from the holder and while grasping the battery, lift it upward.

Continued on next page.

Battery Replacement Instructions (cont'd):

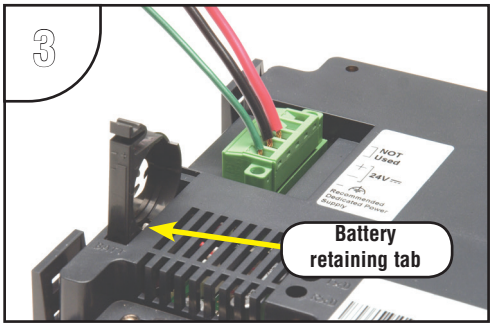

Above shows the empty battery holder and also points out the location of the battery retaining tab for reference in the next step.

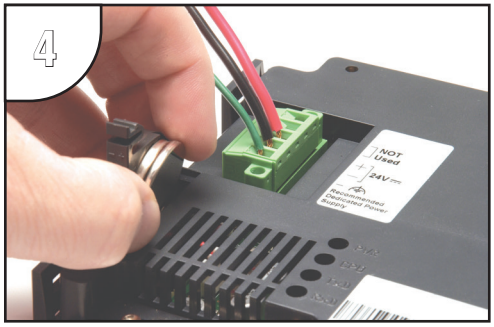

To install the battery, hold the battery so that the larger diameter (+ symbol) is outward. Set the battery to the inside of the retaining tab and then press the upper top of the battery into the holder.

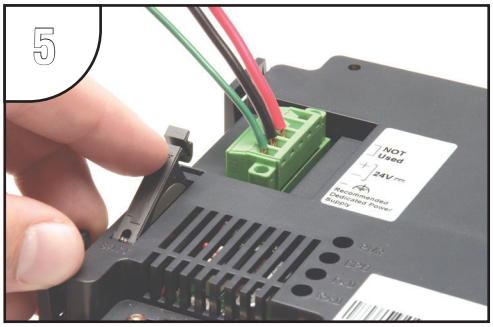

Press the battery holder door downward until the upper latch tab locks into place. Make a note of the date the battery was installed.

CAUTION - The battery used in this device may present a risk of fire or chemical burn if mistreated. Do not recharge, disassemble, heat above 100 °C (212 °F) or incinerate. Replace battery with AutomationDirect part number D2-BAT-1 or CR2354 only. Use of another battery may present a risk of fire or explosion. Dispose of used battery properly. Keep away from children.

Additional precautions:
- **Do not short circuit the battery and be sure to make the correct polarity connections.**
- **Avoid extremely high or low temperatures and high humidity when storing.**
- **Do not dismantle the battery.**

Perchlorate Material, special disposal handling may apply

6” Panel Mounting Clip Replacements – EA-BRK-1

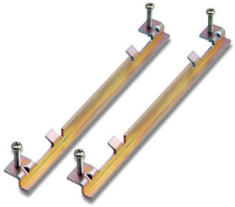

Spare panel mounting clips for 6 inch *C-more* touch panels. Package of 2 clips with 4 screws.

Installation Instructions

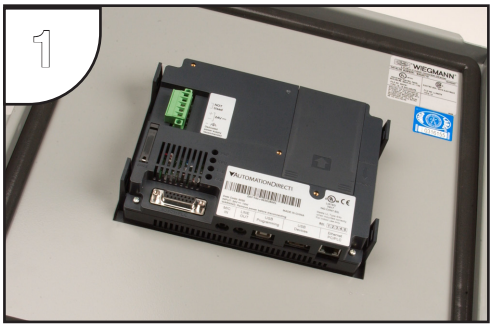

Position the touch panel through the cutout in the control cabinet door and hold in place. The mounting clips can be positioned into one of two different set of slots for different cabinet thicknesses. See table below.

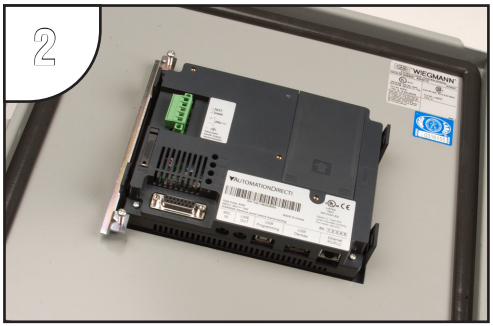

The above photo shows one mounting clip in place. The example is using the lower mounting clip slots that accommodates an enclosure thickness of 0.039 – 0.24 inches [1 – 6 mm]. The upper slots can be used for an enclosure thickness of 0.20 – 0.63 inches [5 – 16 mm].

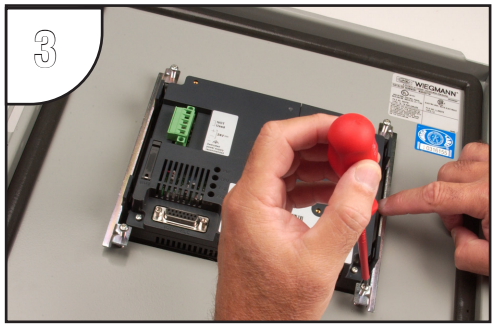

Tighten the mounting screws in an alternating fashion while observing the front of the touch panel. The goal is to make sure the front bezel is pulled up against the enclosure sheet metal uniformly, and the touch panel gasket is fully compressed all the way around its perimeter. Tighten the screws to a torque rating shown in the table below. Avoid over-tightening the screws to the point that they start to deform or bend the mounting clip.

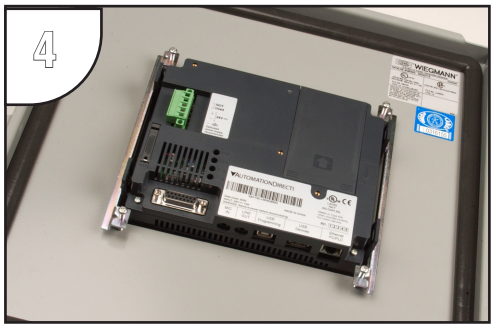

The above photo shows both mounting clips in place and the touch panel secured.

Touch Panel Size	Enclosure Thickness Range	Mounting Clip Screw Torque
6” lower mounting clip position	0.039 - 0.24 inch [1 – 6 mm]	35 ~ 50 oz-in [0.25 ~ 0.35 Nm]
6” upper mounting clip position	0.20 - 0.63 inch [5 – 16 mm]	35 ~ 50 oz-in [0.25 ~ 0.35 Nm]

8–15” Panel Mounting Clip Replacements– EA-BRK-2

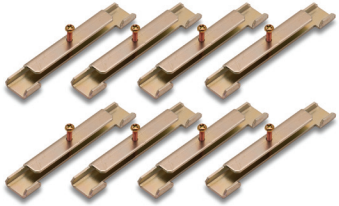

Spare panel mounting clips for the 8 inch through 15 inch *C-more* touch panels. Package of 8 clips with 8 screws.

Installation Instructions

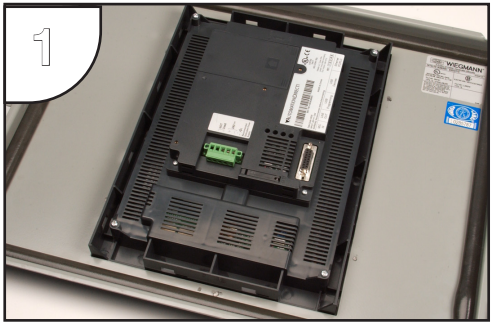

Position the touch panel through the cutout in the control cabinet door and hold in place. The mounting clips are positioned into the slots around the outside edge of the touch panel rear.

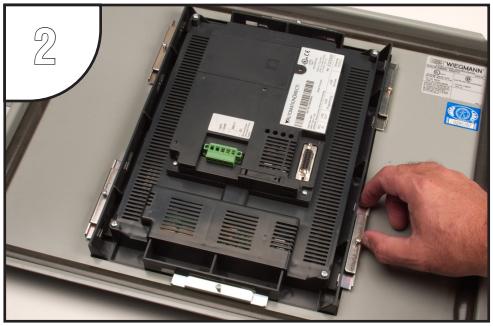

The mounting clips are positioned into the larger portion of the slot at two locations, and then slid toward the smaller portion of the slots to lock them in place. Some slots are arranged to slide to the left and others to the right.

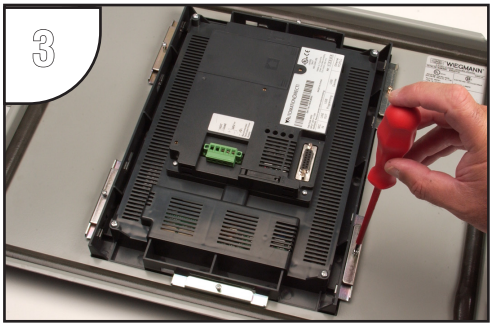

Tighten the mounting screw for each mounting clip in an alternating fashion at all clips while observing the front of the touch panel. The goal is to make sure the front bezel is pulled up against the enclosure sheet metal uniformly, and the touch panel gasket is fully compressed all the way around its perimeter. Tighten the screws to a torque rating shown in the table below. Avoid over-tightening the screws to the point that they start to deform or bend the mounting clip.

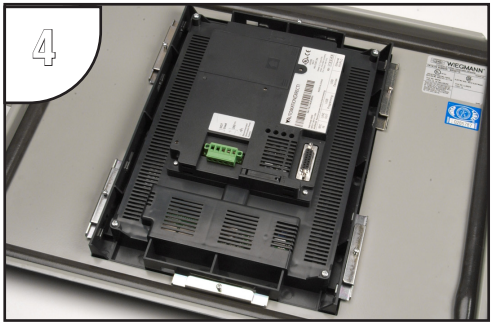

The above photo shows all mounting clips in place and the touch panel secured. The 8”, 10” and 12” touch panels require 6 mounting clips and the 15” touch panel requires 8 mounting clips.

Touch Panel Size	Enclosure Thickness Range	Mounting Clip Screw Torque
6” upper mounting clip position	0.20 - 0.63 inch [5 – 16 mm]	35 ~ 50 oz-in [0.25 ~ 0.35 Nm]

DC Panel Power Connector Replacement – EA-DC-CON

C-more touch panel 5-position DC power connector terminal block replacement. One (1) DC Power Connector is supplied with each touch panel.

Tightening Torque	
Power supply cable torque	71 - 85 oz-in (0.5 - 0.6 Nm)

NOTE: Use 60 / 75 °C copper conductors only.

Recommended DC Supply Fuse		
Panel Size	Rating	ADC p/n
6" – 10"	2.5 A	MDL2-5
12" & 15"	4.0 A	MDL4

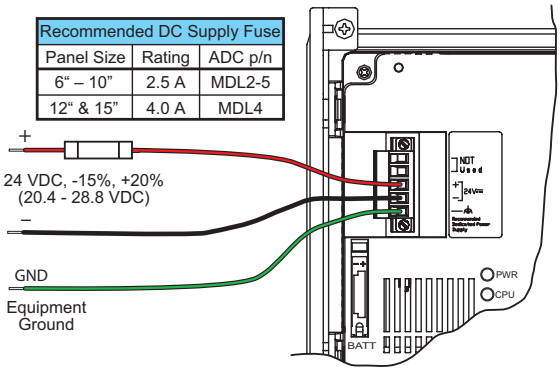

AC Power Adapter Connector Replacement– EA-AC-CON

C-more AC power adapter 3-position AC power connector terminal block replacement.

Tightening Torque	
Power supply cable torque	71 - 85 oz-in (0.5 - 0.6 Nm)
Mounting flange screw torque	57 - 71 oz-in (0.4 - 0.5 Nm)

NOTE: Use 60 / 75 °C copper conductors only.

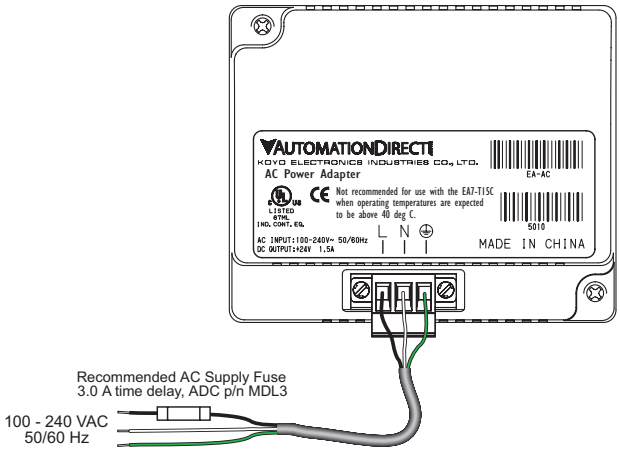

One (1) AC Power Connector is supplied with each AC/DC Power Adapter, EA-AC.

8-15” Panel Backlight Bulb Replacements

Backlight assembly, customer replaceable, for *C-more* 8”, 10”, 12” and 15” touch panels. The 8”, 10” and 15” touch panels use two bulbs per panel and the 12” touch panels use one bulb per panel. The bulbs are packaged two per box for the 8”, 10” and 15” touch panels and one per box for the 12” touch panels.

C-more Replacement Bulbs		
***C-more* Model**	**Bulb Model**	***C-more* Serial Number**
EA7-T8C	***EA-8-BULB***	EA7-T8C+10Z15B020 and older
	EA-8-BULB2	EA7-T8C+10Z15B021 thru EA7-T8C+12Y25B070
	Non-Replaceable LED	EA7-T8C+12Y25B071 and newer
EA7-T10C	***EA-10-BULB***	EA7-T10C+10Z11B080 and older
	EA-10-BULB2	EA7-T10C+10Z11B081 thru EA7-T10C+12Y29B120
	Non-Replaceable LED	EA7-T10C+12Y29B121 and newer
EA7-T12C	***EA-12-BULB***	EA7-T12C+10Z29B019 and older
	EA-12-BULB2	EA7-T12C+10Z29B020 thru EA7-T12C+14102B060
	Non-Replaceable LED	EA7-T12C+14102B061 and newer
EA7-T15C	***EA-15-BULB***	EA7-T15C+10Z22B120 and older
	EA-15-BULB2	EA7-T15C+10Z22B121 thru EA7-T15C+14111B000
	Non-Replaceable LED	EA7-T15C+14111B001 and newer

Serial Number = [Part Number]+[YYMDDFNNN]

YY: Year (05–99 --- e.g. 05 = 2005)
M: Month (1–9, X, Y, Z --- e.g. X = Oct.)
DD: Day (1–31)
F: Manufacturing Site (0–9, A–Z)
NNN: Sequence number for the date listed (000–999)

Date Code = YMMF

Y: Year (0–9 --- e.g. 07 = 2007)
MM: Month (01–12 --- e.g. X = Oct.)
F: Manufacturing Site (0–9, A–Z)

Backlight Bulb Installation Instructions Example:

(See the Data Sheet insert for the specific backlight bulb that is being replaced for more detailed information.)

WARNING: This procedure should only be performed by qualified personnel who are experienced in working with electronic equipment. Take the necessary steps to prevent damage from static electricity discharge. Disconnect input power to the touch panel before proceeding. Be careful not to pinch the ribbon cable between the housing and bezel when re-assembling the panel.

Preparation: Disconnect input power and all other connections, then remove the touch panel from the control cabinet. In a clean environment, place the panel face down on a lint-free soft surface to prevent scratching the front of the panel.

Continued on next page.

Backlight Bulb Installation Instructions Example:

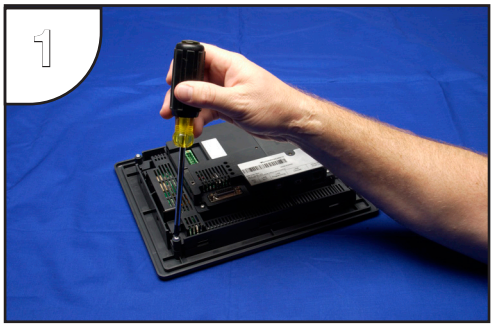

With power disconnected, use a #2 Phillips screwdriver to remove the four outer screws holding the touch panel's main electronics housing to the front bezel.

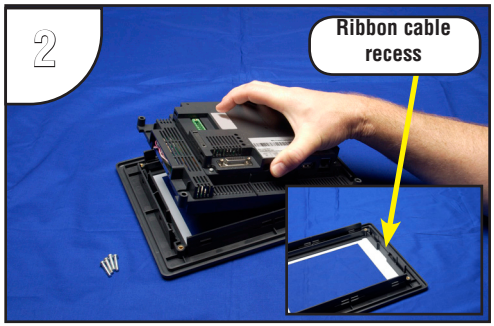

Lift the touch panel's main electronics housing from the front bezel. Set the front bezel and four screws to the side. Observe the ribbon cable recess on the front bezel (see detail) for use in re-assembling the panel.

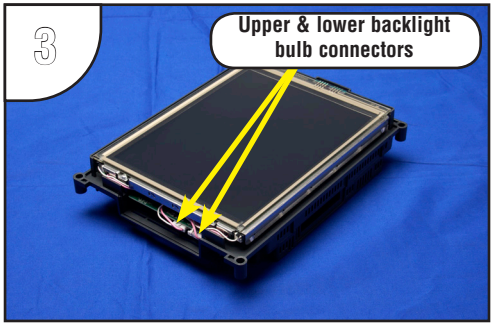

Place the touch panel's main electronics housing facing up on a lint-free soft surface. Position the housing so that the backlight bulb connectors are in plain view.

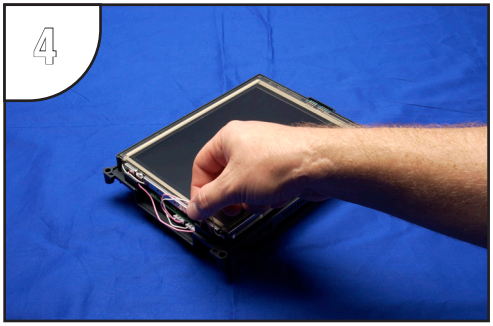

Carefully lift the bulb's wires out of the wire guides so they are free from obstructions. Do this for both the upper and lower backlight bulbs.

Unplug the backlight bulb's power cable connector from the circuit board connector. Again, do this for both the upper and lower backlight bulbs.

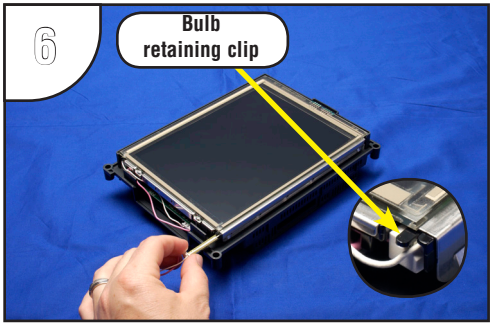

Push up on the bulb retaining clip (see detail) while grasping the plastic end of the bulb assembly and gently slide the bulb from its guide. Do this for both bulbs. The bulb is glass and fragile, so handle with care.

Continued on next page.

Backlight Bulb Installation Instructions Example (cont'd):

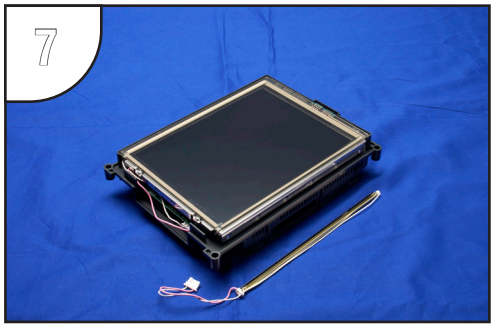

This photo shows the backlight bulb completely removed from its guide in the panel's main electronics housing. (Only one bulb shown.)

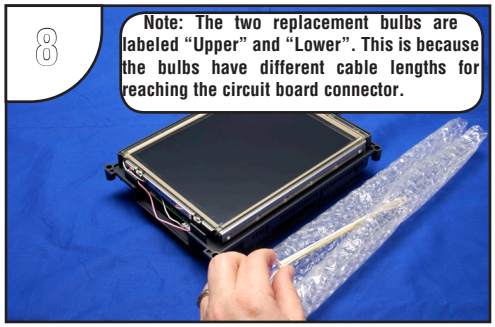

Remove the replacement bulb from its shipping tube and the protective bubble wrap. Note: The replacement bulbs come in pairs and should be replaced in pairs for longevity and maintenance convenience.

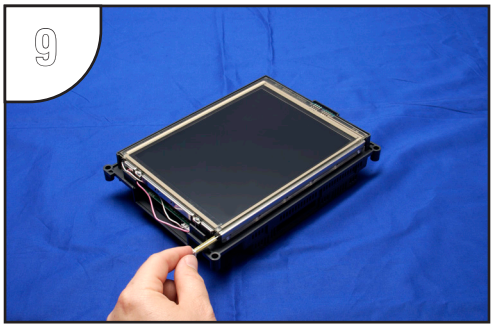

Position the replacement bulb so that the opening in its three-sided gold colored reflector faces toward the LCD touch screen. Using gentle pressure, slide the bulb into the guide until the retaining clip locks.

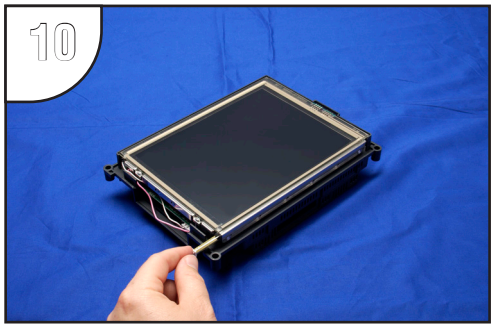

Plug each backlight bulb's power cable connector back into its respective circuit board connector.

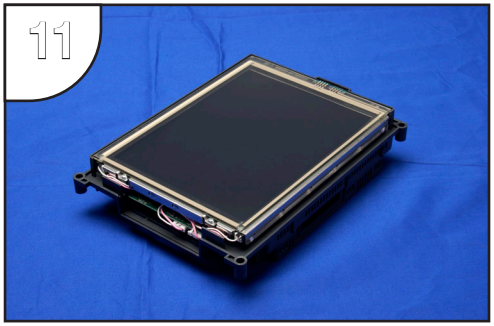

Gently position each backlight bulb's wires back into the wire guides. Position any excess wire length in between the printed circuit board and the LCD to prevent it from becoming pinched between the housing and bezel.

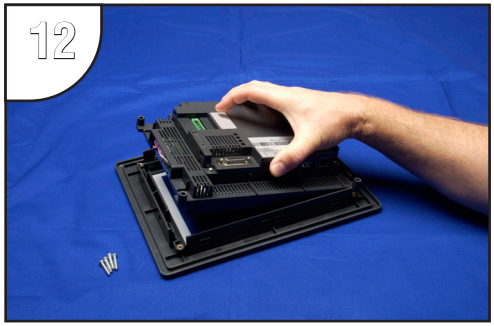

Position the touch panel's main electronics housing into the front bezel so that the flat ribbon cable on the housing aligns with the recess in the front bezel. Insert the four screws and tighten to a maximum of 70 oz-in [0.5 Nm].

6-15” Panel Gasket Replacements – EA-xx-GSK

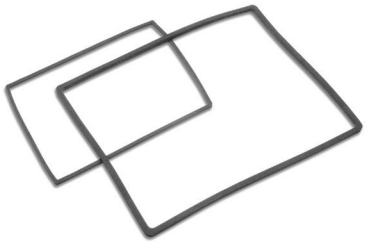

Replacement NEMA 4/4X touch panel gaskets for *C-more* 6”, 8”, 10”, 12” and 15” touch panels.

(The part number is completed by substituting the panel size, 06, 08, 10, 12 or 15, for the xx shown above.)

Gasket Replacement Installation Instructions:

Preparation: Disconnect input power and all other connections, then remove the touch panel from the control cabinet. In a clean environment, place the panel face down on a lint-free soft surface to prevent scratching the front of the panel.

Start at one corner and pull the old gasket out of the channel that holds the gasket in place. Pull the gasket up as you work around the entire perimeter of the touch panel. Discard the old gasket.

Lay the new gasket over the channel so that the long and short sides of the gasket match up to the long and short sides of the touch panel. Start at one corner and match the gasket’s corner to the channel’s corner. Press the gasket into the channel and work all away around the perimeter of the touch panel. Re-install the touch panel.

8-15” Panel Bezel Replacement – EA-xx-BEZEL

The NEMA 4/4X bezels used on the *C-more* 8”, 10”, 12” and 15” touch panels can be easily replaced. The replacement bezel includes the clear membrane element that protects the touch sensitive area. A gasket is not included. The bezel and membrane element do not require replacement under normal use. In the event that the clear membrane is scratched from the use of sharp objects or abrasive materials, follow the procedure outlined below to replace the front bezel.

(The part number is completed by substituting the panel size, 08, 10, 12 or 15, for the xx shown above.)

Note: *The bezel on the 6” **C-more** touch panels is not user replaceable.*

Bezel Replacement Instructions Example:

WARNING: This procedure should only be performed by qualified personnel who are experienced in working with electronic equipment. Take the necessary steps to prevent damage from static electricity discharge. Disconnect input power to the touch panel before proceeding. Be careful not to pinch the ribbon cable between the housing and bezel when re-assembling the panel.

Preparation: Disconnect input power and all other connections, then remove the touch panel from the control cabinet. In a clean environment, place the panel face down on a lint-free soft surface to prevent scratching the front of the panel.

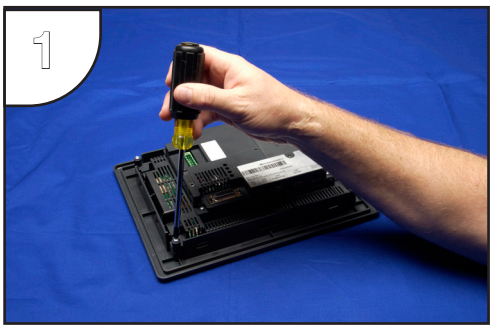

With power disconnected, use a #2 Phillips screwdriver to remove the four outer screws holding the touch panel’s main electronics housing to the front bezel.

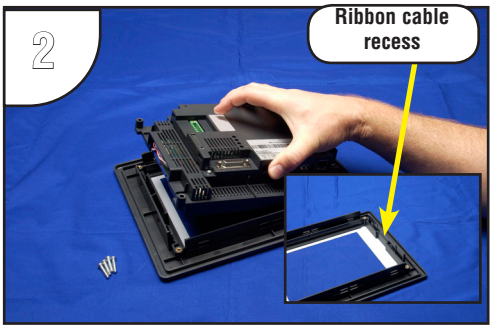

Lift the touch panel’s main electronics housing from the front bezel. Set the four screws to the side and discard the original bezel. Observe the ribbon cable recess on the front bezel (see detail) for use in re-assembling the panel.

Continued on next page.

Bezel Replacement Instructions Example (cont'd):

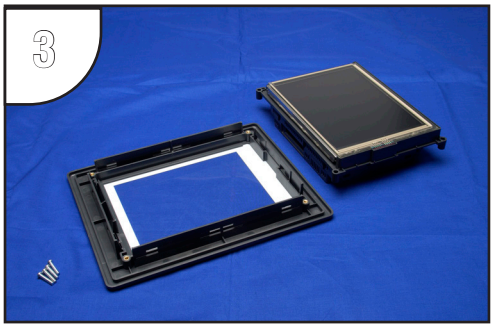

Place the new bezel facing down on the lint-free soft surface along with main electronics and four screws.

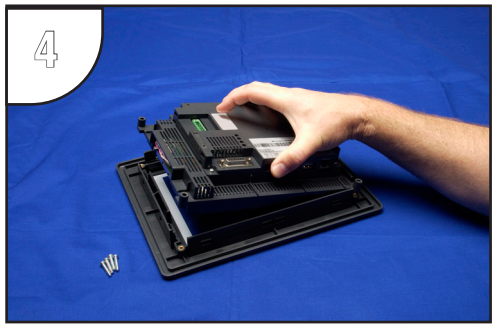

Position the touch panel's main electronics housing into the new bezel so that the flat ribbon cable on the housing matches up with the recess in the front bezel. Insert the four screws and tighten to a maximum of 70 oz-in [0.5 Nm].

6” Adapter Plate Gasket Replacement – EA-6-ADPTR-GSK

6-inch replacement NEMA 4/4X gasket for the *C-more* touch panel adapter plate.

6” Adapter Plate Gasket Replacement Instructions:

Preparation: Disconnect input power and all other connections, remove the touch panel from the 6” adapter plate, and then remove the adapter plate from the control cabinet by removing the six (6) screws that secure the adapter to the control cabinet. In a clean environment, place the adapter plate face down on a lint-free soft surface to prevent scratching the adapter plate.

Start at one corner and pull the old gasket out of the channel that holds the gasket in place. Pull the gasket up as you work around the entire perimeter of the adapter plate. Discard the old gasket.

Lay the new gasket over the channel so that the long and short sides of the gasket match up to the long and short sides of the adapter plate. Start at one corner and match the gasket’s corner to the channel’s corner. Press the gasket into the channel and work all away around the perimeter of the adapter plate. Re-install the adapter plate and then the touch panel.

Panel & PLC Error Code Tables

In this Appendix...

Introduction **A-2**

C-more **Touch Panel Error Code Table** **A-3**

Direct**LOGIC – Panel Error Code PLC-499 Explanation** **A-5**

Direct**LOGIC K-Sequence Protocol – PLC Error Code Table** **A-5**

Direct**LOGIC *Direct*NET Protocol – PLC Error Codes** **A-5**

Modbus Protocols Error Code P499 Explanation **A-6**

AutomationDirect CLICK A-6

AutomationDirect DirectLOGIC - Modbus (Koyo) A-6

Modicon Modbus RTU A-6

Entivity Modbus RTU A-6

Direct**LOGIC ECOM Protocol – PLC Error Codes** **A-6**

Productivity3000 Error Code P499 ..... **A-7**

Allen-Bradley – Panel Error Code PLC-499 Explanation **A-8**

Allen-Bradley Error Code PLC-499 Message Example: A-8

Allen-Bradley DF1 & DH485 Protocols – PLC Error Code Tables **A-9**

Allen-Bradley DF1 & DH485 Protocols – PLC Error Code Tables **A-10**

**Allen-Bradley EtherNet/IP Protocol –
Panel Error Code PLC-496, 497 and 498 Explanation** **A-11**

**Allen-Bradley – EtherNet/IP Protocol – PLC Error Code Tables
ControlLogix, CompactLogix, & FlexLogix** **A-12**

**Allen-Bradley – EtherNet/IP Protocol – PLC Error Code Tables
MicroLogix 1100, 1400 & SLC 5/05, both via native Ethernet port;
MicroLogix 1000, 1100, 1200, 1400, 1500, SLC 5/03/04/05, all via ENI Adapter.** **A-16**

Generic EtherNet IP Protocol – PLC Error Codes **A-21**

Panel & PLC Error Code Tables

GE 90-30 – Panel Error Code PLC-499 Explanation A-22
Mitsubishi FX Protocol – PLC Error Codes A-32
Omron – Panel Error Code PLC-499 Explanation A-32
Omron Host Link Protocol – PLC Error Code Table A-33
Omron FINS Protocol – PLC Error Code Table A-34
Omron – Panel Error Code P495 Explanation A-37
Omron CS/CJ FINS Ethernet Protocol – PLC Error Code Table A-38
Siemens – Panel Error Code P499 Explanation A-39
Siemens PPI Protocol – PLC Error Code Table A-40
Siemens ISO over TCP Protocol – PLC Error Code Table A-41

This page intentionally left blank

A

Introduction

The *C-more* family of touch panels is capable of communicating with a wide variety of Programmable Logic Controllers. *C-more* is capable of communicating over RS232, RS422 and RS485 serial networks as well as Ethernet networks. It communicates with all AutomationDirect PLCs utilizing various protocols. *C-more* also communicates with other brands of PLCs by their different protocols. For a complete list of PLCs and protocols, see the table on page 16 of **Chapter 1: Getting Started**.

As with any network communications, errors will occur. To make it more simple for the user to identify the cause of the possible error, we have provided a error code table for all of the possible errors that *C-more* can detect.

If a *C-more* communications error does occur, the error message will appear across the top of the screen. The *C-more* touch panel also monitors any errors that are generated by the various PLCs that are connected to it. If any of the PLC generated errors are detected, they are displayed across the top of the panel's display embedded as a hexadecimal value in error code P499's message. An explanation of how the specific PLC error is identified in the panel error code P499 is shown proceeding the specific manufacturer's PLC error tables. How the hexadecimal error code value is interrupted is slightly different between manufacturers, so it is important to check the explanation at the beginning of each manufacturer's tables.

Note: *These PLC error codes are provided by the manufacturer of the related PLC and are subject to change by the PLC manufacturer. Please refer to the manufacturers documentation for a more complete and up-to-date list of error codes.*

All errors are also logged into the panel's **Error** log under the **Information** tab in the panel's **System Setup Screens** and are identified by the error code number. See **Chapter 5: System Setup Screens** for additional details.

If you have difficulty determining the cause of the error, please refer to **Chapter 8: Troubleshooting** for some troubleshooting tips or contact our technical support group at 770-844-4200 or the 3rd party PLC manufacturer.

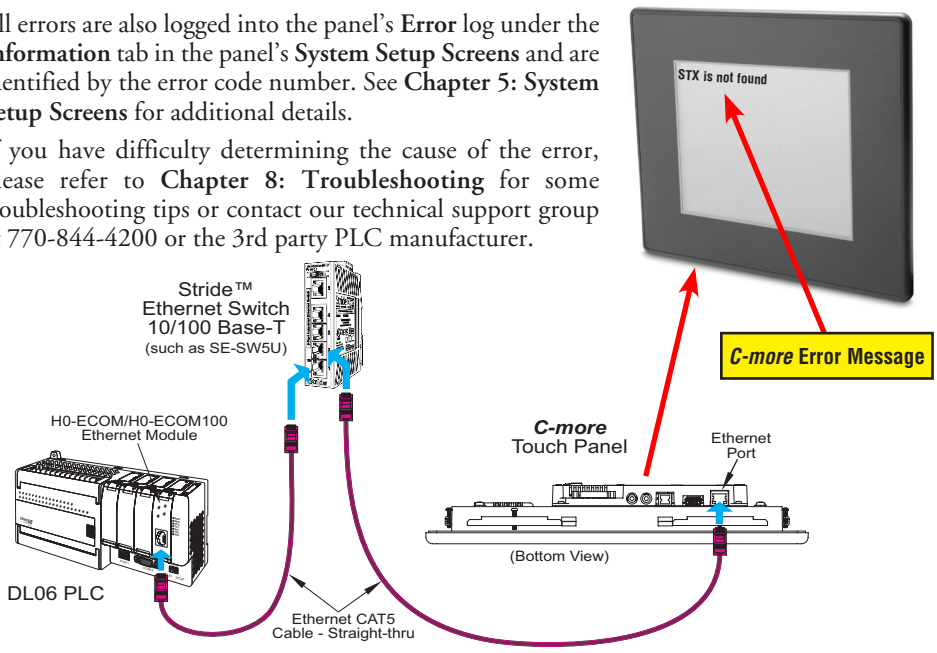

C-more Touch Panel Error Code Table

The following table includes all of the error codes and error messages that the panel will display if the listed cause is detected. All of these errors involve problems that could result with the panel communicating with the connected PLC. Be aware that not all of the panel errors are used with each type of PLC that can be connected to the panel.

C-more Touch Panel Error Code Table		
Error Code	**Error Message**	**Cause**
PLC-001	PLC Communication Timeout (for single PLC) %Device% PLC Communication Timeout (for multiple PLCs, such as RS-422/485)	A timeout occurred after sending a request to the PLC %Device%. %Device% indicates the device name, such as DEV001. Example error message for multiple PLCs: DEV001 PLC Communication Timeout.
PLC-002	NAK received from PLC	A negative acknowledgement (NAK) control code has been generated during a read/write request.
PLC-003	EOT received from PLC	An End of Transmission (EOT) control code is sent by the PLC in response to a Read/Write/SetBit request..
PLC-004	STX is not found	A Start of Text (STX) control code was not found in the data packet received from the PLC.
PLC-005	ETX or ETB is not found	Neither an End of Text (ETX) nor an End of Transmission Block (ETB) control code was found in the data packet received from the PLC.
PLC-006	LRC does not match	There was an incorrect Longitudinal Redundancy Check (LRC) control code in the communications packet received from the PLC. This is an indication that the data in the packet is corrupted.
PLC-007	CRC does not match	There was an incorrect Cyclic Redundancy Check (CRC) control code in the communications packet received from the PLC. This is an indication that the data in the packet is corrupted.
PLC-008	Address does not match	The address value returned in the data packet from the PLC is incorrect.
PLC-009	Different function code received from PLC	The function code returned in the data packet from the PLC is incorrect.
PLC-010	Data size does not match	There are an incorrect number of bytes found in the data packet returned from the PLC.
PLC-011	Invalid value in function code	There is an invalid value in the function code.
PLC-012	Invalid command sent to PLC	There was an invalid command sent to the PLC that wasn't recognized by the PLC.
PLC-013	ENQ received from PLC	If the data packet does not include a negative acknowledgement (NAK - 0x15 value) in the defined packet field, then an enquiry (ENQ) control code error will be displayed.
PLC-014	Transaction ID does not match	This error will be displayed if after checking the Transaction ID Bytes in the data packet, there is no match to what was requested.
PLC-015	%Device% No device found	A PLC device designated as %Device% could not be found.
PLC-016	Data byte communication error	0 byte of data is recieved
PLC-017	Out of address range	The touch panel requested a file number larger than 255.
PLC-018	Panel communication timeout	The server panel did not respond when using the Panel Pass Through.
PLC-019	Found in parity error by hardware	An error detected in the PLC memory.
PLC-020	Can't open serial port	Cannot open the Serial Port. If this error shows on the panel, it indicates a hardware problem.
PLC-021	PLC number does not match	The PLC number does not match the PLC number configured.
PLC-022	Can't reset DCB	Unable to reset the data communication bit.
PLC-023	Cable not connected properly	Communication cable incorrectly installed.

C-more Touch Panel Error Code Table continued on the next page.

A

C-more Touch Panel Error Code Table (cont'd)

C-more Touch Panel Error Code Table (cont'd)		
Error Code	**Error Message**	**Cause**
PLC-024	Cannot detect other devices on network	The panel is not communicating with other devices on the network.
PLC-025	Panel not in polling list	
PLC-026	PLC connection timeout	A timeout occured after sending a request to the PLC.
PLC-027	Memory type incorrect	
PLC-028	PLC failed to respond	The PLC failed to respond after sending a request to the PLC.
PLC-495	**Omron Ethernet Error**	**An error code specific to Omron Ethernet with a Value of XXXX has been returned from the PLC. See the explanation for error code PLC-495 proceeding the Omron CS/CJ FINS Ethernet error code tables.**
PLC-496	**Error code 0xaaaaaaaa returned from PLC**	**Allen-Bradley EtherNET/IP specific. Encapsulation Error. See the explanation for error code PLC-496 proceeding the Allen-Bradley EtherNet/IP error code tables.**
PLC-497	**Error code 0xaaaaaaaa returned from PLC**	**Allen-Bradley EtherNET/IP specific. CIP Error. See the explanation for error code PLC-497 proceeding the Allen-Bradley EtherNet/IP error code tables.**
PLC-498	**Error code 0xaaaaaaaa returned from PLC**	**Allen-Bradley EtherNET/IP specific. Service Packet Error. See the explanation for error code PLC-498 proceeding the Allen-Bradley EtherNet/IP error code tables.**
PLC-499	**Error code XXXX returned from PLC**	**An error code with a value of XXXX has been returned from the PLC. See the explanation for error code PLC-499 below for *Direct*LOGIC and proceeding each set of PLC error code tables that use this error code.**
PLC-500	Cannot write to Serial Port	Data cannot write to the Serial port. Data was sent to the PLC via the Serial Port. If this error shows on the Panel, it indicates a Hardware Problem.
PLC-700	Not enough buffer memory	There was an error while allocating memory for the read buffer. When this error is displayed, a memory leak may have occurred.
PLC-701	Access to inaccessible PLC memory	Request to inaccessible memory from the HMI layer to the PLC protocol layer. This error is an indication that there is a problem in the HMI layer.
PLC-702	Cannot access by different function code	A Read/Write/SetBit request has been sent to an invalid memory area. This error is an indication that there is a problem in the HMI layer.
PLC-703	Write request to PLC Read Only Memory	A PLC Write request was made to the PLC's Read-Only memory area.This error is an indication that there is a problem in the HMI layer or the PLC protocol layer.
PLC-704	Bad device-access	No device (PLC) exists in the server panel or the device name does not match between the server and client when using the Panel Pass Through.
PLC-705	Protocol does not match	The protocol for the device does Not match between the server and client when using the panel pass through.

*Direct*LOGIC – Panel Error Code PLC-499 Explanation

The PLC-499 error code is used to show any errors that are generated by the connected PLC. The PLC-499 error message includes a four digit hexadecimal value embedded in the message. This value can be looked up in the specific PLC's error tables to determine the cause of the error. The possible PLC generated error codes for the *Direct*LOGIC communication protocol are represented by a hexadecimal value as shown in the following message example.

*Direct*LOGIC Error Code PLC-499 Message Example:

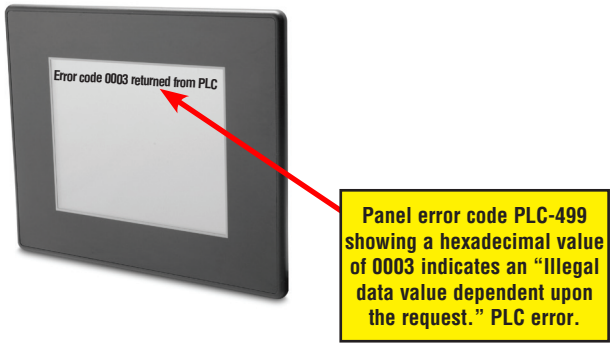

*Direct*LOGIC K-Sequence Protocol – PLC Error Code Table

The following table lists the errors that can be generated by the *Direct*LOGIC PLC when using the K-Sequence protocol.

PLC Error Codes for *Direct*LOGIC – K-Sequence	
Panel Error Code PLC-499 Hex Value	**Description**
01F8	Error setting value.
020D	Error in key mode.
021C	Password protected.

Note: *The following errors can be generated from the designated PLC, are monitored by the* ***C-more*** *touch panel, and displayed on the touch panel's screen as a hexadecimal value in panel error code PLC-499 message, if active. Please refer to the PLC manufacturer's documentation for additional information.*

*Direct*LOGIC *Direct*NET Protocol – PLC Error Codes

Only errors as listed in the Touch Panel Error Code Table shown on page A-3 can occur when using the *Direct*LOGIC *Direct*NET protocol, there are no PLC generated errors.

*Direct*LOGIC error code tables continued on the next page.

A

Modbus Protocols Error Code P499 Explanation

The following table lists the errors that can be generated by the Modbus protocols:

AutomationDirect CLICK

AutomationDirect DirectLOGIC - Modbus (Koyo)

Modicon Modbus RTU

Entivity Modbus RTU

Note: *The following errors can be generated from the designated PLC, are monitored by the* ***C-more*** *touch panel, and displayed on the touch panel's screen as a hexadecimal value in panel error code PLC-499 message, if active. Please refer to the PLC manufacturer's documentation for additional information.*

PLC Error Codes Modbus Protocols		
Panel Error Code P499 Hex Value	**Name**	**Meaning**
0x0001	ILLEGAL FUNCTION	The function code received in the query is not an allowable action for the server (or slave). This may be because the function code is only applicable to newer devices and was not implemented in the unit selected. It could also indicate that the server (or slave) is in the wrong state to process a request of this type, for example because it is unconfigured and is being asked to return registered values.
0x0002	ILLEGAL DATA ADDRESS	The data address received in the query is not an allowable address for the server (or slave). More specifically, the combination of reference number and transfer length is invalid. For a controller with 100 registers, the PDU addresses the first register as 0, and the last one as 99. If a request is submitted with a starting register address of 96 and a quantity of registers of 4, then the request will successfully operate (address-wise at least) on registers 96, 97, 98, 99. If a request is submitted with a starting register of 96 and a quantity of registers of 5, then the request will fail with Exception code 0x02 "Illegal Data Address" since it attempts to operate on registers 96, 97, 98, 99 and 100, and there is no register with address 100.
0x0003	ILLEGAL DATA VALUE	A value contained in the query data field is not an allowable value for server (or slave). This indicates a fault in the structure of the remainder of a complex request, such as that the implied length is incorrect. It specifically does NOT mean that a data item submitted for storage in a register has a value outside the expectation of the application program, since the Modbus protocol is unaware of the significance of any particular value of any particular register.
0x0004	SLAVE DEVICE FAILURE	An unrecoverable error occurred while the server (or slave) was attempting to perform the requested action.

*Direct*LOGIC ECOM Protocol – PLC Error Codes

Only errors as listed in the Touch Panel Error Code Table shown on page A-3 can occur when using the *Direct*LOGIC ECOM protocol, there are no PLC generated errors.

Productivity3000 Error Code P499

Note: *The following errors can be generated from the designated PLC, are monitored by the* ***C-more*** *touch panel, and displayed on the touch panel's screen as a hexadecimal value in panel error code PLC-499 message, if active. Please refer to the PLC manufacturer's documentation for additional information.*

PLC Error Codes for Productivity3000	
Panel Error Code P499 Hex Value	**Meaning**
0x0001	The function code received in the query is not an allowable action for the server (or slave). This may be because the function code is only applicable to newer devices and was not implemented in the unit selected. It could also indicate that the server (or slave) is in the wrong state to process a request of this type, for example because it is unconfigured and is being asked to return registered values.
0x0002	Address out of range. Check to make sure that the C-more tag and System ID match the Productivity3000 Programming Software Tag Name and System ID. The project file in the Productivity3000 system and the imported CSV into ***C-more*** must be in sync with each other.
0x0003	A value contained in the query data field is not an allowable value for the server (or slave). This indicates a fault in the structure of the remainder of a complex request, such as that the implied length is incorrect. It specifically does **NOT** mean that a data item submitted for storage in a register has a value outside the expectation of the application program, since the Modbus protocol is unaware of the significance of any particular value of any particular register.
0x0004	An unrecoverable error occurred while the server (or slave) was attempting to perform the requested action.

A

Allen-Bradley – Panel Error Code PLC-499 Explanation

The PLC-499 error code is used to show any errors that are generated by the connected PLC. The PLC-499 error message includes a four digit hexadecimal value embedded in the message. This value can be looked up in the specific PLC's error tables to determine the cause of the error. The possible PLC generated error codes for the Allen-Bradley DF1 and DH485 communication protocols are represented by a hexadecimal value as shown in the following diagram. Please note that the error code is broken down into three sections. It is possible for more than one type of PLC error to be displayed in this value.

Allen-Bradley Error Code PLC-499 Message Example:

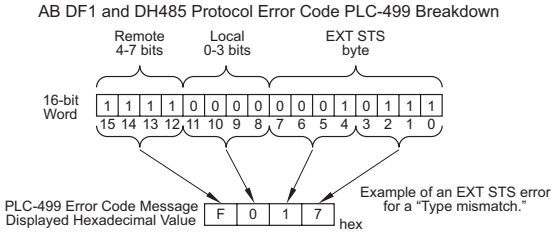

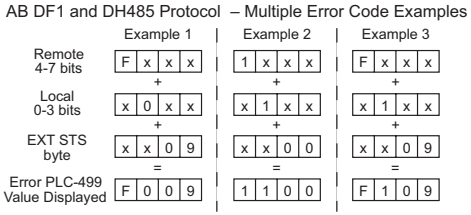

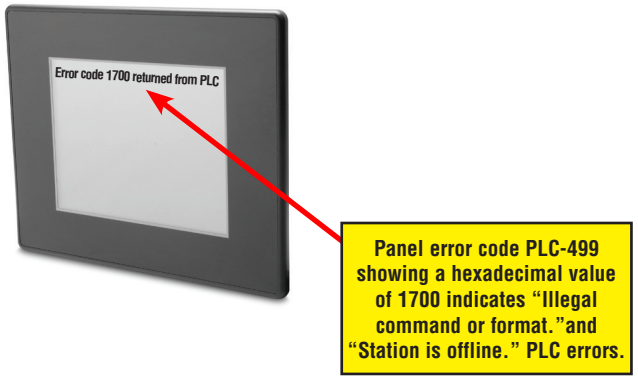

Allen-Bradley DF1 & DH485 Protocols – PLC Error Code Tables

The following PLC error code tables cover possible errors that are detected by the panel from Allen-Bradley PLCs using the DF1 and DH485 protocols. DF1 includes full and half duplex communications for the MicroLogix 1000, 1100. 1200, 1400, 1500, SLC 5/03, /04, /05, ControlLogix, CompactLogix and FlexLogix, and full duplex communications for the PLC5. DH485 includes all MicroLogix and SLC500 PLC's and any communication connection using an Allen-Bradley AIC device using the DH485 protocol.

Note: *The following errors can be generated from the designated PLC, are monitored by the* ***C-more*** *touch panel, and displayed on the touch panel's screen as a hexadecimal value in panel error code PLC-499 message, if active. Please refer to the PLC manufacturer's documentation for additional information.*

PLC Errors for Allen-Bradley DF1 and DH485 Protocols, Local STS Errors (0-3 bits)	
Panel Error Code PLC-499 Hex Value	**Description**
0x0	Success; no error.
0x1	DST node is out of buffer space.
0x2	Cannot guarantee delivery; link layer. (The remote node specified does not ACK command.)
0x3	Duplicate token holder detected.
0x4	Local port is disconnected.
0x5	Application layer timed out waiting for response.
0x6	Duplicate node detected.
0x7	Station is offline.
0x8	Hardware fault.

PLC Errors for Allen-Bradley DF1 and DH485 Protocols, Remote STS Errors (4-7 bits)	
Panel Error Code PLC-499 Hex Value	**Description**
0x0	Success; no error.
0x10	Illegal command or format.
0x20	Host has a problem and will not communicate.
0x30	Remote node host is missing, disconnected, or shut down.
0x40	Host could not complete function due to hardware fault.
0x50	Addressing problem or memory protect rungs.
0x60	Function not allowed due to command protection selection.
0x70	Processor is in Program Mode.
0x80	Compatibility mode file missing or communication zone problem.
0x90	Remote node cannot buffer command.
0xA0	Wait ACK (1775 KA buffer full).
0xB0	Remote node problem due to download.
0xC0	Wait ACK (1775 KA buffer full).
0xD0	not used
0xE0	not used
0xF0	**Error code in the EXT STS byte. See the error code table on the next page.**

(PLC generated error codes for the Allen-Bradley DF1 protocol continued on the next page.)

A

Allen-Bradley DF1 & DH485 Protocols – PLC Error Code Tables

PLC Errors for Allen-Bradley DF1 and DH485 Protocols, EXT STS Command Code for F0 Command	
Panel Error Code PLC-499 Hex Value	**Description**
0x0	not used
0x1	A field has an illegal value.
0x2	Fewer levels specified in address than minimum for any address.
0x3	More levels specified in address than system supports.
0x4	Symbol not found.
0x5	Symbol is of improper format.
0x6	Address does not point to something usable.
0x7	File is wrong size.
0x8	Cannot complete request; situation has changed since start of the command.
0x9	Data or file size is too large.
0xA	Transaction size plus word address is too large.
0xB	Access denied; improper privilege.
0xC	Condition cannot be generated; resource is not available.
0xD	Condition already exists; resource is readily available.
0xE	Command cannot be executed.
0xF	Histogram overflow.
0x10	No access.
0x11	Illegal data type.
0x12	Invalid parameter or invalid data.
0x13	Address reference exists to deleted area.
0x14	Command execution failure for unknown reason; possible PLC 3 histogram overflow.
0x15	Data conversion error.
0x16	Scanner not able to communicate with 1771 rack adapter.
0x17	Type mismatch.
0x18	1771 module response was not valid.
0x19	Duplicated label.
0x22	Remote rack fault.
0x23	Timeout.
0x24	Unknown error.
0x1A	File is open; another node owns it.
0x1B	Another node is the program owner.
0x1C	Disk File is write protectid or otherwise unavailable
0x1D	Disk File is being used by another application. Update not performed (offline only).
0x1E	Data table element protection violation.
0x1F	Temporary internal problem.

Allen-Bradley EtherNet/IP Protocol – Panel Error Code PLC-496, 497 and 498 Explanation

The PLC-496, PLC-497, and PLC-498 error codes are used to show any errors that are generated by the connected PLC. These error messages include an eight digit hexadecimal value displayed embedded in the message. This value can be looked up in the specific PLC's error tables to determine the cause of the error. The possible PLC generated error codes for the Allen-Bradley EtherNet/IP communication protocol is represented by a hexadecimal value as shown in the following message example.

Allen-Bradley Error Code PLC-496, 497, 498 Message Example:

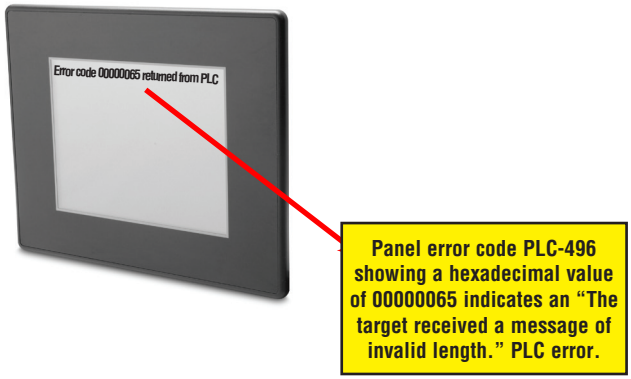

A

Allen-Bradley – EtherNet/IP Protocol – PLC Error Code Tables ControlLogix, CompactLogix, & FlexLogix

The following PLC error code tables cover possible errors that are detected by the panel from Allen-Bradley PLCs using the EtherNet/IP protocol. This includes all ControlLogix, CompactLogix and FlexLogix PLCs.

Note: *The following errors can be generated from the designated PLC, are monitored by the* ***C-more*** *touch panel, and displayed on the touch panel's screen as a hexadecimal value in panel error code PLC-496 message, if active. Please refer to the PLC manufacturer's documentation for additional information.*

PLC Errors for Allen-Bradley EtherNet/IP Protocol –Encapsulation Errors (Error code 0xaaaaaaaa returned from the PLC.)	
Panel Error Code PLC-496 Hex Value	**Description**
0x00000001	The sender issued an invalid or unsupported encapsulation command.
0x00000002	Insufficient memory resources in the receiver to handle the command. You can get this error if the 1761-NET-ENI cannot connect to the PLC serially.
0x00000003	Poorly formed or incorrect data in the data portion of the encapsulation message.
0x00000004 - 0x00000063	Reserved for legacy (Rockwell Automation).
0x00000064	An orginator used an invalid session handle when sending an encapsulation message to the target.
0x00000065	The target received a message of invalid length.
0x00000066 - 0x00000068	Reserved for legacy (Rockwell Automation).
0x00000069	Unsupported encapsulation protocol revision.
0x0000006a - 0x0000ffff	Reserved for future expansion.

PLC Errors for Allen-Bradley EtherNet/IP Protocol – CIP Errors (Error code 0xaaaaaaaa returned from the PLC.)	
Panel Error Code PLC-497 Hex Value	**Description**
0x010100	Connection Manager: Connection in Use or Duplicate Forward Open.
0x010103	Connection Manager: Transport Class and Trigger combination not supported.
0x010106	Connection Manager: Ownership Conflict.
0x010107	Connection Manager: Connection not found at target application.
0x010108	Connection Manager: Invalid connection type (problem with type or priority).
0x010109	Connection Manager: Invalid connection size.
0x010110	Connection Manager: Device not configured.
0x010111	Connection Manager: RPI not supported. Could also be problem with inactivity timeout.
0x010113	Connection Manager: Connection Manager cannot support any more connections.
0x010114	Connection Manager: Either the vendor ID or the Product Code in the key segment did not match the device.
0x010115	Connection Manager: Product Type in the key segment did not match the device.
0x010116	Connection Manager: Major or minor revision information in the key segment did not match the device.

(PLC generated error codes for the Allen-Bradley EtherNet/IP protocol for ControlLogix, CompactLogix, and FlexLogix continued on the next page.)

Allen-Bradley – EtherNet/IP Protocol – PLC Error Code Tables ControlLogix, CompactLogix, & FlexLogix (cont'd)

PLC Errors for Allen-Bradley EtherNet/IP Protocol – CIP Errors (Error code 0xaaaaaaaa returned from the PLC.)	
Panel Error Code PLC-497 Hex Value	**Description**
0x010117	Connection Manager: Invalid connection point.
0x010118	Connection Manager: Invalid configuration format.
0x010119	Connection Manager: Connection request fails since there is no controlling connection currently open.
0x01011a	Connection Manager: Target application cannot support any more connections.
0x01011b	Connection Manager: RPI is smaller than the Production Inhibit Time.
0x010203	Connection Manager: Connection cannot be closed since the connection has timed out.
0x010204	Connection Manager: Unconnected Send timed out waiting for a response.
0x010205	Connection Manager: Parameter error in Unconnected send service.
0x010206	Connection Manager: Message too large for Unconnected message service.
0x010207	Connection Manager: Unconnected acknowledge without reply.
0x010301	Connection Manager: No buffer memory available.
0x010302	Connection Manager: Network Bandwidth not available for data.
0x010303	Connection Manager: No Tag filters available.
0x010304	Connection Manager: Not configured to send real-time data.
0x010311	Connection Manager: Port specified in Port segment not available.
0x010312	Connection Manager: Link address specified in port segment not available.
0x010315	Connection Manager: invalid segment type or segment value in path.
0x010316	Connection Manager: Path and Connection not equal in close.
0x010317	Connection Manager: Ether Segment not present or Encoded Value in Network Segment is invalid.
0x010318	Connection Manager: Link address to self invalid.
0x010319	Connection Manager: Resources on Secondary unavailable.
0x01031a	Connection Manager: Connection already established.
0x01031b	Connection Manager: Direct connection already established.
0x01031c	Connection Manager: Miscellaneous.
0x01031d	Connection Manager: Redundant connection mismatch.
0x01031e	Connection Manager: No more consumer resources available in the producing module.
0x01031f	Connection Manager: No connection resources exist for target path.
0x010320 - 0x0107ff	Connection Manager: Vendor specific.
0x020000	Resource unavailable: Connection Manager resources are unavailable to handle service request.
0x030000	Invalid parameter value.
0x040000	Path segment error: The path segment identifier or the segment syntax was not understood by the processing node.
0x050000	Path destination unknown: The path is referencing an object class, instance or structure element that is not known or is not contained in the processing node.
0x060000	Partial transfer: Only part of the expected data was transferred.
0x070000	Connection lost: The messaging connection was lost.

(PLC generated error codes for the Allen-Bradley EtherNet/IP protocol for ControlLogix, CompactLogix, and FlexLogix continued on the next page.)

A

Allen-Bradley – EtherNet/IP Protocol – PLC Error Code Tables ControlLogix, CompactLogix, & FlexLogix (cont'd)

PLC Errors for Allen-Bradley EtherNet/IP Protocol – CIP Errors (Error code 0xaaaaaaaa returned from the PLC.)	
Panel Error Code PLC-497 Hex Value	**Description**
0x080000	Service not supported: The requested service was not implemented or was not defined for this Object Class/Instance.
0x090000	Invalid attribute value: Invalid attribute data detected.
0x0a0000	Attribute list error: An attribute in the Get_Attribute_List or Set_Attribute_List response has a non-zero status.
0x0b0000	Already in requested mode/state: The object is already in the mode/state being requested by the service.
0x0c0000	Object state conflict: The object cannot perform the requested service in its current mode/state.
0x0d0000	Object already exists: The requested instance of object to be created already exists.
0x0e0000	Attribute not settable: A request to modify non-modifiable attribute was received.
0x0f0000	Privilege violation: A permission/privilege check failed.
0x100000	Device state conflict: The device's current mode/state prohibits the execution of the requested service.
0x110000	Reply data too large: The data to be transmitted in the response buffer is larger than the allocated response buffer.
0x120000	Fragmentation of a primitive value: The service specified an operation that is going to fragment a primitive data value. For example, trying to send a 2 byte value to a REAL data type (4 byte).
0x130000	Not enough data: The service did not supply enough data to perform the specified operation.
0x140000	Attribute not supported: The attribute specified in the request is not supported.
0x150000	Too much data: The service supplied more data than was expected.
0x160000	Object does not exist: The object specified does not exist in the device.
0x170000	Service fragmentation sequence not in progress: The fragmentation sequence for this service is not currently active for this data.
0x180000	No stored attribute data: The attribute data of this object was no saved prior to the requested service.
0x190000	Store operation failure: The attribute data of this object was not saved due to a failure during the attempt.
0x1a0000	Routing failure, request packet too large: The service request packet was too large for transmission on a network in the path to the destination.
0x1b0000	Routing failure, response packet too large: The service reponse packet was too large for transmission on a network in the path from the destination.
0x1c0000	Missing attribute list entry data: The service did not supply an attribute in a list of attributes that was needed by the service to perform the requested behavior.
0x1d0000	Invalid attribute value list: The service is returning the list of attributes supplied with status information for those attributes that were invalid.
0x1e0000	Embedded service error: See Service Packet error list (PLC-498 Error codes) below:
0x1f0000	Vendor specific error: A vendor specific error has been encountered. This occurs when none of the specified errors relate to the error in the device.
0x200000	Invalid parameter: A parameter associated with the request was invalid. This code is used when a parameter does meet the requirements defined in an Application Object specification.
0x210000	Write-once value or medium already written: An attempt was made to write to a write-once-medium that has already been written or to modify a value that cannot be change once established.
0x220000	Invalid Reply Received: An invalid reply is received (example: service code sent doesn't match service code received.).

(PLC generated error codes for the Allen-Bradley EtherNet/IP protocol for ControlLogix, CompactLogix and FlexLogix continued on the next page.)

Allen-Bradley – EtherNet/IP Protocol – PLC Error Code Tables ControlLogix, CompactLogix, & FlexLogix (cont'd)

PLC Errors for Allen-Bradley EtherNet/IP Protocol – CIP Errors (Error code 0xaaaaaaaa returned from the PLC.)	
Panel Error Code PLC-497 Hex Value	**Description**
0x230000	Reserved by CIP for future extensions.
0x240000	Reserved by CIP for future extensions.
0x250000	Key failure in path: The key segment was included as the first segment in the path does not match the destination module. The object specific status shall indicate which part of the key check failed.
0x260000	Path Size Invalid: The size of the path which was sent with the Service Request is either not large enough to allow the Request to be routed to an object or too much routing data was included.
0x270000	Unexpected attribute in list: An attempt was made to set an attribute that is not able to be set at this time.
0x280000	Invalid Member ID: The Member ID specified in the request does not exist in the specified Class/Instance/ Attribute.
0x290000	Member not settable: A request to modify a non-modifiable member was received.
0x2a0000	Group 2 only server general failure: This error code may only be reported by DeviceNet group 2 only servers with 4K or less code space and only in place of Service not supported, Attribute not supported and Attribute not settable.
0x2b0000 - 0xcf0000	Reserved by CIP for future extensions.
0xd00000 - 0xff0000	Reserved for Object Class and service errors: This range of error codes is to be used to indicate Object Class specific errors. Use of this range should only be used when errors in this table don't accurately reflect the error encountered.

PLC Errors for Allen-Bradley EtherNet/IP Protocol – Service Packet Errors (Error code 0xaaaaaaaa returned from the PLC.)	
Panel Error Code PLC-498 Hex Value	**Description**
0x040000	This general status codes that the tag name could not be deciphered. This could mean that the tag name was entered incorrectly or does not exist in the PLC.
0x050000	The particular item referenced (usually instance) could not be found.
0x060000	The amount of data requested would not fit into the response buffer. Partial data transfer has occurred.
0x0a0000	An error has occurred trying to process one of the attributes.
0x130000	Not enough command data/parameters were supplied in the command to execute the service requested.
0x1c0000	An insufficient number of attributes were provided compared to the attribute count.
0x260000	The tag name length specified did not match what was in the message.
0xff0521	You have tried to access beyond the end of the data object.
0xff0721	The abbreviated type does not match the data type of the data object.
0xff0421	The beginning offset was beyond the end of the template.

A

Allen-Bradley – EtherNet/IP Protocol – PLC Error Code Tables MicroLogix 1100, 1400 & SLC 5/05, both via native Ethernet port; MicroLogix 1000, 1100, 1200, 1400, 1500, SLC 5/03/04/05, all via ENI Adapter

The following PLC error code tables cover possible errors that are detected by the panel from Allen-Bradley PLCs using the EtherNet/IP protocol. This includes MicroLogix 1100, 1400 & SLC 5/05, both using their native Ethernet port, and MicroLogix 1000, 1100, 1200, 1400, 1500, SLC 5/03, 5/04 and 5/05 using an Allen-Bradly ENI Adapter.

Note: *The following errors can be generated from the designated PLC, are monitored by the* ***C-more*** *touch panel, and displayed on the touch panel's screen as a hexadecimal value in panel error code PLC-496 message, if active. Please refer to the PLC manufacturer's documentation for additional information.*

PLC Errors for Allen-Bradley EtherNet/IP Protocol –Encapsulation Errors (Error code 0xaaaaaaaa returned from the PLC.)	
Panel Error Code PLC-496 Hex Value	**Description**
0x00000001	The sender issued an invalid or unsupported encapsulation command.
0x00000002	Insufficient memory resources in the receiver to handle the command. You can get this error if the 1761-NET-ENI cannot connect to the PLC serially.
0x00000003	Poorly formed or incorrect data in the data portion of the encapsulation message.
0x00000004 - 0x00000063	Reserved for legacy (Rockwell Automation).
0x00000064	An orginator used an invalid session handle when sending an encapsulation message to the target.
0x00000065	The target received a message of invalid length.
0x00000066 - 0x00000068	Reserved for legacy (Rockwell Automation).
0x00000069	Unsupported encapsulation protocol revision.
0x0000006a - 0x0000ffff	Reserved for future expansion.

PLC Errors for Allen-Bradley EtherNet/IP Protocol – CIP Errors (Error code 0xaabbbb returned from the PLC.)	
Panel Error Code PLC-497 Hex Value	**Description**
0x010100	Connection Manager: Connection in Use or Duplicate Forward Open.
0x010103	Connection Manager: Transport Class and Trigger combination not supported.
0x010106	Connection Manager: Ownership Conflict.
0x010107	Connection Manager: Connection not found at target application.
0x010108	Connection Manager: Invalid connection type (problem with type or priority).
0x010109	Connection Manager: Invalid connection size.
0x010110	Connection Manager: Device not configured.
0x010111	Connection Manager: RPI not supported. Could also be problem with inactivity timeout.

(PLC generated error codes for the Allen-Bradley EtherNet/IP protocol for MicroLogix 1100, 1400, SLC 5/05, or ENI Adapter continued on the next page.)

Allen-Bradley – EtherNet/IP Protocol – PLC Error Code Tables MicroLogix 1100, 1400 & SLC 5/05, both via native Ethernet port; MicroLogix 1000, 1100, 1200, 1400, 1500, SLC 5/03/04/05, all via ENI Adapter

PLC Errors for Allen-Bradley EtherNet/IP Protocol – CIP Errors (Error code 0xaabbbb returned from the PLC.)	
Panel Error Code PLC-497 Hex Value	**Description**
0x010113	Connection Manager: Connection Manager cannot support any more connections.
0x010114	Connection Manager: Either the vendor ID or the Product Code in the key segment did not match the device.
0x010115	Connection Manager: Product Type in the key segment did not match the device.
0x010116	Connection Manager: Major or minor revision information in the key segment did not match the device.
0x010117	Connection Manager: Invalid connection point.
0x010118	Connection Manager: Invalid configuration format.
0x010119	Connection Manager: Connection request fails since there is no controlling connection currently open.
0x01011a	Connection Manager: Target application cannot support any more connections.
0x01011b	Connection Manager: RPI is smaller than the Production Inhibit Time.
0x010203	Connection Manager: Connection cannot be closed since the connection has timed out.
0x010204	Connection Manager: Unconnected Send timed out waiting for a response.
0x010205	Connection Manager: Parameter error in Unconnected send service.
0x010206	Connection Manager: Message too large for Unconnected message service.
0x010207	Connection Manager: Unconnected acknowledge without reply.
0x010301	Connection Manager: No buffer memory available.
0x010302	Connection Manager: Network Bandwidth not available for data.
0x010303	Connection Manager: No Tag filters available.
0x010304	Connection Manager: Not configured to send real-time data.
0x010311	Connection Manager: Port specified in Port segment not available.
0x010312	Connection Manager: Link address specified in port segment not available.
0x010315	Connection Manager: invalid segment type or segment value in path.
0x010316	Connection Manager: Path and Connection not equal in close.
0x010317	Connection Manager: Ether Segment not present or Encoded Value in Network Segment is invalid.
0x010318	Connection Manager: Link address to self invalid.
0x010319	Connection Manager: Resources on Secondary unavailable.
0x01031a	Connection Manager: Connection already established.
0x01031b	Connection Manager: Direct connection already established.
0x01031c	Connection Manager: Miscellaneous.
0x01031d	Connection Manager: Redundant connection mismatch.
0x01031e	Connection Manager: No more consumer resources available in the producing module.
0x01031f	Connection Manager: No connection resources exist for target path.
0x010320 - 0x0107ff	Connection Manager: Vendor specific.

(PLC generated error codes for the Allen-Bradley EtherNet/IP protocol for MicroLogix 1100, 1400, SLC 5/05, or ENI Adapter continued on the next page.)

A

Allen-Bradley – EtherNet/IP Protocol – PLC Error Code Tables MicroLogix 1100, 1400 & SLC 5/05, both via native Ethernet port; MicroLogix 1000, 1100, 1200, 1400, 1500, SLC 5/03/04/05, all via ENI Adapter

PLC Errors for Allen-Bradley EtherNet/IP Protocol – CIP Errors (Error code 0xaabbbb returned from the PLC.)	
Panel Error Code PLC-497 Hex Value	**Description**
0x020000	Resource unavailable: Connection Manager resources are unavailable to handle service request.
0x030000	Invalid parameter value.
0x040000	Path segment error: The path segment identifier or the segment syntax was not understood by the processing node.
0x050000	Path destination unknown: The path is referencing an object class, instance or structure element that is not known or is not contained in the processing node.
0x060000	Partial transfer: Only part of the expected data was transferred.
0x070000	Connection lost: The messaging connection was lost.
0x080000	Service not supported: The requested service was not implemented or was not defined for this Object Class/Instance.
0x090000	Invalid attribute value: Invalid attribute data detected.
0x0a0000	Attribute list error: An attribute in the Get_Attribute_List or Set_Attribute_List response has a non-zero status.
0x0b0000	Already in requested mode/state: The object is already in the mode/state being requested by the service.
0x0c0000	Object state conflict: The object cannot perform the requested service in its current mode/state.
0x0d0000	Object already exists: The requested instance of object to be created already exists.
0x0e0000	Attribute not settable: A request to modify non-modifiable attribute was received.
0x0f0000	Privilege violation: A permission/privilege check failed.
0x100000	Device state conflict: The device's current mode/state prohibits the execution of the requested service.
0x110000	Reply data too large: The data to be transmitted in the response buffer is larger than the allocated response buffer.
0x120000	Fragmentation of a primitive value: The service specified an operation that is going to fragment a primitive data value. For example, trying to send a 2 byte value to a REAL data type (4 byte).
0x130000	Not enough data: The service did not supply enough data to perform the specified operation.
0x140000	Attribute not supported: The attribute specified in the request is not supported.
0x150000	Too much data: The service supplied more data than was expected.
0x160000	Object does not exist: The object specified does not exist in the device.
0x170000	Service fragmentation sequence not in progress: The fragmentation sequence for this service is not currently active for this data.
0x180000	No stored attribute data: The attribute data of this object was no saved prior to the requested service.
0x190000	Store operation failure: The attribute data of this object was not saved due to a failure during the attempt.
0x1a0000	Routing failure, request packet too large: The service request packet was too large for transmission on a network in the path to the destination.
0x1b0000	Routing failure, response packet too large: The service reponse packet was too large for transmission on a network in the path from the destination.
0x1c0000	Missing attribute list entry data: The service did not supply an attribute in a list of attributes that was needed by the service to perform the requested behavior.

(PLC generated error codes for the Allen-Bradley EtherNet/IP protocol for MicroLogix 1100, 1400, SLC 5/05, or ENI Adapter continued on the next page.)

Allen-Bradley – EtherNet/IP Protocol – PLC Error Code Tables MicroLogix 1100, 1400 & SLC 5/05, both via native Ethernet port; MicroLogix 1000, 1100, 1200, 1400, 1500, SLC 5/03/04/05, all via ENI Adapter

PLC Errors for Allen-Bradley EtherNet/IP Protocol – CIP Errors (Error code 0xaabbbb returned from the PLC.)	
Panel Error Code PLC-497 Hex Value	**Description**
0x1d0000	Invalid attribute value list: The service is returning the list of attributes supplied with status information for those attributes that were invalid.
0x1e0000	Embedded service error: See Service Packet error list (PLC-498 Error codes) below:
0x1f0000	Vendor specific error: A vendor specific error has been encountered. This occurs when none of the specified errors relate to the error in the device.
0x200000	Invalid parameter: A parameter associated with the request was invalid. This code is used when a parameter does meet the requirements defined in an Application Object specification.
0x210000	Write-once value or medium already written: An attempt was made to write to a write-once-medium that has already been written or to modify a value that cannot be change once established.
0x220000	Invalid Reply Received: An invalid reply is received (example: service code sent doesn't match service code received.).
0x230000	Reserved by CIP for future extensions.
0x240000	Reserved by CIP for future extensions.
0x250000	Key failure in path: The key segment was included as the first segment in the path does not match the destination module. The object specific status shall indicate which part of the key check failed.
0x260000	Path Size Invalid: The size of the path which was sent with the Service Request is either not large enough to allow the Request to be routed to an object or too much routing data was included.
0x270000	Unexpected attribute in list: An attempt was made to set an attribute that is not able to be set at this time.
0x280000	Invalid Member ID: The Member ID specified in the request does not exist in the specified Class/Instance/ Attribute.
0x290000	Member not settable: A request to modify a non-modifiable member was received.
0x2a0000	Group 2 only server general failure: This error code may only be reported by DeviceNet group 2 only servers with 4K or less code space and only in place of Service not supported, Attribute not supported and Attribute not settable.
0x2b0000 - 0xcf0000	Reserved by CIP for future extensions.
0xd00000 - 0xff0000	Reserved for Object Class and service errors: This range of error codes is to be used to indicate Object Class specific errors. Use of this range should only be used when errors in this table don't accurately reflect the error encountered.

(PLC generated error codes for the Allen-Bradley EtherNet/IP protocol for MicroLogix 1100, SLC 5/05, or ENI Adapter continued on the next page.)

Allen-Bradley – EtherNet/IP Protocol – PLC Error Code Tables MicroLogix 1100, 1400 & SLC 5/05, both via native Ethernet port; MicroLogix 1000, 1100, 1200, 1400, 1500, SLC 5/03/04/05, all via ENI Adapter

PLC Errors for Allen-Bradley EtherNet/IP Protocol – Service Packet Errors (Error code 0xaabbbb returned from the PLC.)	
Panel Error Code PLC-498 Hex Value	**Description**
0x010000	DST Node is out of buffer space.
0x020000	Cannot guarantee delivery; link layer (The remote node specified does not ACK command).
0x030000	Duplicate token holder detected.
0x040000	Local port is disconnected.
0x050000	Application layer timed out waiting for response.
0x060000	Duplicate node detected.
0x070000	Station is offline.
0x080000	Hardware fault.
0x100000	Illegal command or format. Typical error received from PLC when addressed requested to the PLC does not exist. Usually occurs if memory map has not been expanded in PLC to the range requested from panel.
0x200000	Host has a problem and will not communicate.
0x300000	Remote node host is missing, disconnected, or shut down.
0x400000	Host could not complete function due to hardware fault.
0x500000	Addressing problem or memory protected rungs.
0x600000	Function not allowed due to command protection selection.
0x700000	Processor is in Program Mode.
0x800000	Compatibility mode file missing or communication zone problem.
0x900000	Remote node cannot buffer command.
0xA00000	Wait ACK (1775 KA buffer full).
0xB00000	Not used.
0xC00000	Not used.
0xD00000	Error code in the EXT STS byte. See the error code table below.
0xE00000	Fewer levels specified in address than minimum for any address.
0xF00300	More levels specified in address than system supports.
0xF00400	Symbol not found.
0xF00500	Symbol is of improper format.
0xF00600	Address does not point to something usable.
0xF00700	File is wrong size.
0xF00800	Cannot complete request, situation has changed since start of the command.
0xF00900	Data or file size is too large.
0xF00900	Transaction size plus word address is too large.
0xF00B00	Access denied; improper privilege. This will occur if data file is set to constant or protected.
0xF00C00	Condition cannot be generated; resource is not available.
0xF00D00	Condition already exists; resource is readily available.

(PLC generated error codes for the Allen-Bradley EtherNet/IP protocol for MicroLogix 1100, 1400, SLC 5/05, or ENI Adapter continued on the next page.)

Allen-Bradley – EtherNet/IP Protocol – PLC Error Code Tables MicroLogix 1100, 1400 & SLC 5/05, both via native Ethernet port; MicroLogix 1000, 1100, 1200, 1400, 1500, SLC 5/03/04/05, all via ENI Adapter

PLC Errors for Allen-Bradley EtherNet/IP Protocol – Service Packet Errors (Error code 0xaabbbb returned from the PLC.)	
Panel Error Code PLC-498 Hex Value	**Description**
0xF00E00	Command cannot be executed.
0xF00F00	Histogram overflow.
0xF01000	No access.
0xF01100	Illegal data type.
0xF01200	Invalid parameter or invalid data.
0xF01300	Address reference exists to deleted area.
0xF01400	Command execution failure for unknown reason; possible histogram overflow.
0xF01500	Data conversion error.
0xF01600	Scanner not able to communicate with 1771 rack adapter.
0xF01700	Type mismatch.
0xF01800	1771 module response was not valid.
0xF01900	Duplicated label.
0xF02200	Remote rack fault.
0xF02300	Timeout.
0xF02400	Unknown error.
0xF01A00	File is open; another node owns it.
0xF01B00	Another node is the program owner.
0xF01C00	Reserved.
0xF01D00	Reserved.
0xF01E00	Data table element protection violation.
0xF01F00	Temporary internal problem.

Generic EtherNet IP Protocol – PLC Error Codes

Only errors as listed in the Touch Panel Error Code Table shown on page A-3 can occur when using the Generic Ethernet IP protocol, there are no PLC generated errors.

A

GE 90-30 – Panel Error Code PLC-499 Explanation

The PLC-499 error code is used to show any errors that are generated by the connected PLC. The PLC-499 error message includes a four digit hexadecimal value embedded in the message. This value can be looked up in the specific PLC's error tables to determine the cause of the error.The possible PLC generated error codes for the GE 90-30 communication protocol are represented by a hexadecimal value as shown in the following message example.

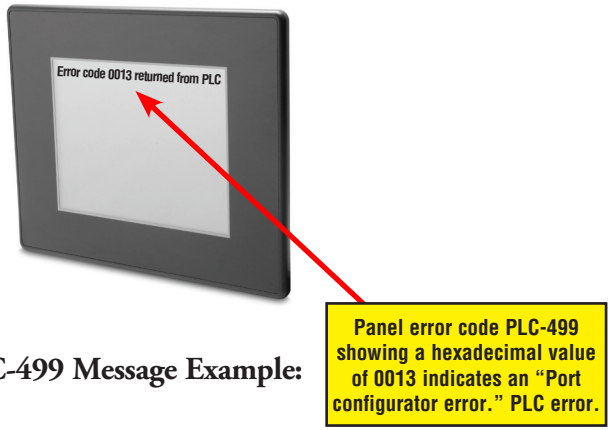

GE 90-30 Error Code PLC-499 Message Example:

GE 90-30 SNPX Protocol – PLC Error Code Tables

The following table lists the errors that can be generated by the GE 90-30 PLC when using the SNPX protocol.

Note: *The following errors can be generated from the designated PLC, are monitored by the* ***C-more*** *touch panel, and displayed on the touch panel's screen as a hexadecimal value in panel error code PLC-499 message, if active. Please refer to the PLC manufacturer's documentation for additional information.*

PLC Errors for GE 90-30 SNPX Protocol (Major)	
Panel Error Code PLC-499 Hex Value	**Description**
No error	Successful completion. (This is the expected completion value in the COMMREQ Status Word.)
0x0002	Insufficient Privilege. For Series 90-70 PLC, the minor error code contains the privilege level required for the service request.
0x0004	Protocol Sequence Error. The CPU has received a message that is out of order.
0x0005	Service Request Error, the minor error code contains the specific error code.
0x0006	Illegal Mailbox Type. Service request mailbox type is either undefined or unexpected.
0x0007	The PLC CPU's Service Request Queue is full. The master should retry later. It is recommended that the master wait a minimum of 10 msec before sending another service request.
0x000A	SNP DOS Driver Error. The minor error code contains the specific error code.
0x000B	Illegal Service Request. The requested service is either not defined or not supported. (This value is returned in lieu of the actual 01h value passed in the SNP error message, to avoid confusion with the normal successful COMMREQ completion.)
0x000C	Local SNP/SNP-X Error. An error occurred within the SNP task in the CMM module in this PLC. This error may occur in either an SNP master or an SNP slave. The minor error code contains the specific error code.
0x000D	Remote SNP Error. An error occurred within the SNP slave task in the CMM module in the remote PLC. The minor error code contains the specific error code.
0x000E	Autodial Error. An error occurred while attempting to send a command string to an attached external modem. The minor error code contains the specific error code.
0x000F	SNP-X slave error. An error occurred within the SNPX task in the remote slave device. The minor error code contains the specific error code.
0x0013	Port configurator error.
0x0050	Problem with sending mail to the slave Service Request task. (Series 90-70 PLC CPUs only)
0x0051	Problem with getting mail from the slave Service Request task. (Series 90-70 PLC CPUs only)
0x0055	Slave SNP task timed out before receiving an SRP response. (Series 90-70 PLC CPUs only)
0x0056	Slave SNP task could not find the requested datagram connection. (Series 90-70 PLC CPUs only)
0x0057	Slave SNP task encountered an error in trying to write the datagram. (Series 90-70 PLC CPUs only)
0x0058	Slave SNP task encountered an error in trying to update the datagram. (Series 90-70 PLC CPUs only)

(PLC generated error codes for the GE 90-30 SNPX protocol continued on the next page.)

GE 90-30 SNPX Protocol – PLC Error Code Tables (cont'd)

PLC Errors for GE 90-30 SNPX Protocol (Minor-Major) (cont'd)	
Panel Error Code PLC-499 Hex Value	**Description**
PLC Error 0x010C	WAIT-type COMMREQ is not permitted; must use NOW AIT-type.
PLC Error 0x010E	Not used
PLC Error 0x010F	The service request code in an X-Request message is unsupported or invalid at this time. This error may occur if an SNP-X communication session has not been success fully established at the slave device.
PLC Error 0x020C	COMMREQ command is not supported.
PLC Error 0x020E	The modem command string length exceeds 250 characters.
PLC Error 0x020F	Insufficient privilege level in the slave PLC CPU for the requested SNP-X service. Password protection at PLC CPU may be preventing the requested service.
PLC Error 0x0213	Unsupported COMMREQ. These errors are only generated when there is no protocol currently being run on a port, and the port receives a COMMREQ. (The port may be disabled or an error has occurred in processing a new configuration).
PLC Error 0x030C	SNP communication is not active. Must initiate a new SNP communication by sending an Attach or Long Attach COMMREQ.
PLC Error 0x030E	COMMREQ Data Block Length is too small. Output command string data is missing or incomplete.
PLC Error 0x030F	Invalid slave memory type in X-Request message.
PLC Error 0x0313	Invalid COMMREQ length.
PLC Error 0x040C	SNP slave did not respond to Attach message from master.
PLC Error 0x040E	Serial output timeout. The CMM module was unable to transmit the modem autodial output from the serial port. (May be due to missing CTS signal when the CMM is configured to use hardware flow control.)
PLC Error 0x040F	Invalid slave memory address or range in X-Request message.
PLC Error 0x0413	Invalid COMMREQ status word location.
PLC Error 0x050C	Unable to write SNP Status Word to local PLC memory; may be due to invalid Status Word memory type or address.
PLC Error 0x050E	Response was not received from modem. Check modem and cable.
PLC Error 0x050F	Invalid data length in X-Request message. Data length must be non-zero, and may not exceed decimal 1000 bytes.
PLC Error 0x0513	Invalid COMMREQ data.
PLC Error 0x060C	Master device memory type is not valid in this PLC.
PLC Error 0x060E	Modem responded with BUSY. Modem is unable to complete the requested connection. The remote modem is already in use; retry the connection request at a later time.
PLC Error 0x060F	X-Buffer data length does not match the service request in X-Request message. The X-Buffer message length is obtained from the Next Message Length field in the X-Request message; the length of the data within the buffer message is always the message length.
PLC Error 0x070C	Master device memory address or length is zero.
PLC Error 0x070E	Modem responded with NO CARRIER. Modem is unable to complete the requested connection. Check the local and remote modems and the telephone line.
PLC Error 0x070F	Queue Full indication from Service Request Processor in slave PLC CPU. The slave is temporarily unable to complete the service request. The master should try again later. It is recommended that the master wait at least 10 msec before repeating the X-Request.

(PLC generated error codes for the GE 90-30 SNPX protocol continued on the next page.)

GE 90-30 SNPX Protocol – PLC Error Code Tables (cont'd)

PLC Errors for GE 90-30 SNPX Protocol (Minor-Major) (cont'd)	
Panel Error Code PLC-499 Hex Value	**Description**
0x080C	Unable to read or write master device memory locations specified in COMMREQ. Usually caused by invalid memory address for this PLC. SNP message exchange may have taken place.
0x080E	Modem responded with NO DIALTONE. Modem is unable to complete the requested connection. Check the modem connections and the telephone line.
0x080F	Service Request Processor response exceeds 1000 bytes; the SNP-X slave device cannot return the data in an X-Response message. (This error applies to CMM module only.)
0x090C	Master device memory data length exceeds maximum data size of CMM module (2048 bytes). Must use a smaller data length. Use multiple COMMREQs if total data length exceeds this maximum value.
0x090E	Modem responded with ERROR. Modem is unable to complete the requested command. Check the modem command string and modem.
0x0A0C	Slave device memory type is missing or not valid.
0x0A0E	Modem responded with RING, indicating that the modem is being called by another modem. Modem is unable to complete the requested command. Retry the modem command at a later time.
0x0B0C	Slave device memory address is missing or zero.
0x0B0E	An unknown response was received from the modem. Modem is unable to complete the requested command. Check the modem command string and modem. The modem response is expected to be either CONNECT or OK.
0x0C0C	COMMREQ Data Block Length is too small. (When expected COMMREQ length is 6 words or less. An improper length may cause other minor error codes 6-11.)
0x0D0C	Invalid Diagnostic Status Word (DSW) starting word or length.
0x0E0C	Invalid maximum SNP message data size. Must be an even value from 42 to 2048.
0x0F0C	Invalid Privilege Level. Must be 0 through 4 or -1.
0x100C	Invalid Fault Table selector. Must be 1 for I/O Fault Table, or 2 for PLC Fault Table.
0x100F	Unexpected Service Request Processor error. (This error applies to CMM module only; the unexpected SRP error code is saved in the Diagnostic Status Words in the CMM module.)
0x110C	Invalid Fault Table starting index. Must be 1-32 for I/O Fault Table, or 1-16 for PLC.
0x120C	Invalid fault count. Must be 1-32 for I/O Fault Table, or 1-16 for PLC Fault Table.
0x130C	Invalid Set PLC Date/Time mode. Must be 1-4.
0x140C	Invalid Set PLC Date/Time date, time, or day-of-week value.
0x150C	Unable to retrieve master device PLC time/date from PLC CPU.
0x150F	Requested service is not permitted in a Broadcast request. The master must direct the X-Request message to a specific SNP-X slave device.
0x160C	Invalid slave PLC type. Must be 0 for Series 90-70, or 1 for Series 90-30 or Series 90-20.
0x170C	Invalid datagram type. Must be 01h for normal datagram, or 81h (129) for permanent datagram.
0x180C	Missing or too many datagram point formats. Must be 1-32.
0x190C	Invalid datagram point format data.

(PLC generated error codes for the GE 90-30 SNPX protocol continued on the next page.)

GE 90-30 SNPX Protocol – PLC Error Code Tables (cont'd)

PLC Errors for GE 90-30 SNPX Protocol (Minor-Major) (cont'd)	
Panel Error Code PLC-499 Hex Value	**Description**
0x1A0C	Datagram area size is too small to include data for all specified point formats.
0x1B0C	Invalid number of Control Program Names. Must be 1-8.
0x1C0C	SNP-X Request exceeds maximum data size (1000 bytes). Must use a smaller data length. Use multiple COMMREQs if necessary.
0x1D0C	Invalid SNP-X communication session type. Must be 0 for a single slave device, or 1 for multiple slave devices.
0x1E0C	Illegal destination SNP ID specified for SNP-X slave. Must be 0-7 ASCII characters, plus a terminating null character (00h). The Null SNP ID (eight bytes of 00h) may be used to specify any single device. The Broadcast SNP ID (eight bytes of FFh) may be use to specify all slave devices on the serial link.
0x1F0C	Destination SNP ID does not match SNP-X session type. The Broadcast SNP ID is not permitted in a single-slave SNP-X session. The Null SNP ID is not permitted in a multiple-slave SNP-X session.
0x200C	Inactivity timeout (T3'). The SNP slave has not received any new SNP messages within the configured T3' time interval.
0x200F	Invalid Message Type field in a received X-Request message. The message type of an X-Request message must be 58h = 'X'.
0x210C	A Parity error has occurred on an Attach, Attach Response, or Update Real–time Datagram message. Communications have not been established.
0x210F	Invalid Next Message Type or Next Message Length field in a received X Request message. If this request does not use a buffer (0-2 bytes of data), the Next Message Type must be zero. If this request will be followed with a buffer message (more than 2 byte.)), the Next Message Type must be 54h = 'T', and the Next Message Length must specify the length of the X-Buffer message. Valid X-Buffer message lengths are 9-1008 bytes (data length plus 8 bytes).
0x220C	A BCC (Block Check Code) error has occurred on an Attach, Attach Response, or Update Realtime Datagram message. Communications have not been established.
0x220F	Invalid Message Type field in a received X-Buffer message. The message type of an X-Buffer message must be 54h = 'T'.
0x230C	A Framing or Overrun serial error has occurred on an Attach, Attach Response, or Update Realtime Datagram message. Communications have not been established.
0x230F	Invalid Next Message Type field in a received X-Buffer message. Since an X-Buffer message is never followed by another message, the Next Message Type must always be zero.
0x240C	An invalid SNP message type was received when an Attach, Attach Response, or Update Realtime Datagram message was required. Communications have not been established.
0x250C	An invalid next message length value was specified in an Attach, Attach Response, or Update Realtime Datagram message. Communications have not been established.
0x260C	An unexpected SNP message type was received when an Attach, Attach Response, or Update Realtime Datagram was required. Communications have not been established.
0x270C	Another Break was received while SNP slave was waiting for an Attach or Update Realtime Datagram message.
0x280C	An SNP message has been sent and retried the maximum number of times. A maximum of two retries are permitted. A retry is caused by a NAK from from the remote SNP device.
0x290C	A received SNP message has been NAKed the maximum number of two times. The NAKed message may be retransmitted a maximum of two times.

(PLC generated error codes for the GE 90-30 SNPX protocol continued on the next page.)

GE 90-30 SNPX Protocol – PLC Error Code Tables (cont'd)

PLC Errors for GE 90-30 SNPX Protocol (Minor-Major) (cont'd)	
Panel Error Code PLC-499 Hex Value	**Description**
0x2A0C	An unknown message was received when an acknowledge (ACK or NAK) was required.
0x2B0C	Sequence Error. An unexpected SNP message type was received.
0x2C0C	Received SNP message contains bad next message length value.
0x2D0C	Acknowledge timeout. An acknowledge (ACK or NAK) was not received within the configured T2 time interval. A slave device may generate this error if the master device has aborted after maximum response NAKs and does not NAK the next response retry.
0x2E0C	Response timeout. The SNP Master did not receive an SNP Response message within the configured T5' time interval.
0x2F0C	Buffer message timeout. An expected Text Buffer or Connection Data message was not received within the configured T5" time interval.
0x300C	Serial output timeout. The CMM module was unable to transmit a Break, an SNP message, or SNP acknowledge (ACK or NAK) from the serial port. (May be due to missing CTS signal when the CMM module is configured to use hardware flow control.)
0x310C	SNP slave did not receive a response from the Service Request Processor in the PLC CPU.
0x320C	COMMREQ timeout. The COMMREQ did not complete within the configured time interval.
0x330C	An SNP Request or Response was aborted prior to completion due to reception of a Break.
0x340C	PLC backplane communications error
0x350C	Invalid Piggyback Status data memory type or address. Communications have not been established.
0x360C	Invalid SNP Slave SNP ID. Must be a 0-7 ASCII characters, plus a terminating null character (00h). The Null SNP ID (eight bytes of 00h) may be used to specify any single slave device.
0x370C	The SNP master has received a response message containing an unexpected data length. Usually indicates a problem with the remote SNP slave device. May occur when Series 90-70 commands (Task Memory or Program Block Memory Read/Write) are issued to a Series 90-30 slave device.
0x380C	Response code in received SNP-X response message does not match expected value. (Response code must equal the request code +80h.)
0x390C	SNP-X Response message exceeds maximum data size (decimal 1000 bytes). Data in the Response is ignored.
0x400C	A parity error has occurred on an X-Attach Response message when establishing a new SNP-X communication session. Communications have not been established.
0x400D	The requested service is not supported by the SNP slave.
0x400F	Serial output timeout. The slave was unable to transmit an SNP-X message from the serial port. (May be due to missing CTS signal when the CMM module is configured to use hardware flow control.)

(PLC generated error codes for the GE 90-30 SNPX protocol continued on the next page.)

GE 90-30 SNPX Protocol – PLC Error Code Tables (cont'd)

PLC Errors for GE 90-30 SNPX Protocol (Minor-Major) (cont'd)	
Panel Error Code PLC-499 Hex Value	**Description**
0x410C	A framing or overrun error has occurred on an X-Attach Response message when establishing a new SNP-X communication session. Communications have not been established.
0x410D	SNP slave on CMM module requires PLC CPU privilege level 2 to operate. The SNP slave has rejected a request to change to a higher or lower privilege level.
0x410F	An SNP-X request was aborted prior to completion due to reception of a Break.
0x420C	A BCC (Block Check Code) error has occurred on an X-Attach Response message when establishing a new SNP-X communication session. Communications have not been established.
0x420D	SNP Request or Response message exceeds maximum data length of the CMM module. (Total data length for Mailbox and all following Buffer messages is 2048 bytes.) The master must use a smaller data length. Use multiple requests if total data length exceeds the maximum value.
0x420F	An X-Buffer message was received containing greater than 1000 bytes of data. The data is ignored.
0x430C	An invalid message type was received when an X-Attach Response was required when establishing a new SNP-X communication session. Communications have not been established.
0x430D	Improper Write Datagram message format. Series 90-70 slave devices use a different format for this message than Series 90-30 or Series 90-20 slave devices. The master must use the proper message format for this SNP slave device. (The SNP master in the CMMmodule sends this message as part of the Establish Datagram COMMREQ command. The datagram has been partially established, but is not usable; the datagram should be cancelled by using the Datagram ID returned by the COMMREQ.)
0x430F	The SNP-X slave did not receive a response from the Service Request Processor in the PLC CPU.
0x440C	An invalid next message type value was detected in an X-Attach Response message when establishing a new SNP-X communication session. Communications have not been established.
0x440D	A datagram error occurred in a Series 90-70 slave device (dual-port error).
0x440F	PLC backplane communications error.
0x450C	An invalid response code was detected in an X-Attach Response message when establishing a new SNP-X communication session. Communications have not been established.
0x460C	An expected X-Attach Response message was not received within the response timeout interval when establishing a new SNP-X communication session. The master has retried the X-Attach message twice without receiving a response. Communications have not been established.
0x500C	A parity error has occurred on an X-Attach Response message when re-establishing an existing SNP-X communication session. Communications have not been established.
0x500F	A parity error has occurred in a received X-Attach message.
0x510C	A framing or overrun error has occurred on an X-Attach Response message when re-establishing an existing SNP-X communication session. Communications have not been established.
0x510F	A framing or overrun error has occurred in a received X-Attach message.
0x520C	A BCC (Block Check Code) error has occurred on an X-Attach Response message when re-establishing an existing SNP-X communication session. Communications have not been established.
0x520F	A BCC (Block Check Code) error has occurred in a received X-Attach message.

(PLC generated error codes for the GE 90-30 SNPX protocol continued on the next page.)

GE 90-30 SNPX Protocol – PLC Error Code Tables (cont'd)

PLC Errors for GE 90-30 SNPX Protocol (Minor-Major) (cont'd)	
Panel Error Code PLC-499 Hex Value	**Description**
0x530C	An invalid message type was received when an X-Attach Response was required when re-establishing an existing SNP-X communication session. Communications have not been established.
0x530F	An invalid Message Type was received when an X-Attach message was required. (For an X-Attach message, the message type must be 58h = 'T'.)
0x540C	An invalid Next Message Type value was detected in an X-Attach Response message when re-establishing an existing SNP-X communication session. Communications have not been established.
0x540F	An invalid Next Message Type value was detected in a received X-Attach message. (For an X-Attach message, the Next Message Length must be zero.)
0x550C	An invalid response code was detected in an X-Attach Response message when re-establishing an existing SNP-X communication session. Communications have not been established.
0x550F	An invalid request code was detected in a received X-Attach message.
0x560C	An expected X-Attach Response message was not received within the response timeout interval when re-establishing an existing SNP-X communication session. The master has retried the X-Attach message twice without receiving a response. Communications have not been established.
0x600C	A parity error has occurred on an X-Response message.
0x600F	A parity error has occurred in a received X-Request message.
0x610C	A framing or overrun error has occurred on an X-Response message.
0x610F	A framing or overrun error has occurred in a received X-Request message.
0x620C	A BCC (Block Check Code) error has occurred on an X-Response message.
0x620F	A BCC (Block Check Code) error has occurred in a received X-Request message.
0x630C	An invalid message type was received when an X-Response message was required.
0x640C	An invalid next message type value was detected in an X-Response message.
0x650C	An invalid response code was detected in an X-Response message.
0x660C	An expected X-Response message was not received within the response time.
0x700C	A parity error has occurred on an Intermediate Response message.
0x700F	A parity error has occurred in a received X-Buffer message.
0x710C	A framing or overrun error has occurred on an Intermediate Response message.
0x710F	A framing or overrun error has occurred in a received X-Buffer message.
0x720C	A BCC (Block Check Code) error has occurred on an Intermediate Response message.
0x720F	A BCC(Block Check Code) error has occurred in a received X-Buffer message.
0x730C	An invalid message type was received when an Intermediate Response message was required.
0x730F	An expected X-Buffer message was not received.
0x740C	An invalid next message type value was detected in an Intermediate Response message.
0x750C	An invalid response code was detected in an Intermediate Response message.
0x760C	An expected Intermediate Response message was not received within the response timeout interval.

(PLC generated error codes for the GE 90-30 SNPX protocol continued on the next page.)

A

GE 90-30 SNPX Protocol – PLC Error Code Tables (cont'd)

PLC Errors for GE 90-30 SNPX Protocol (Minor-Major) (cont'd)	
Panel Error Code PLC-499 Hex Value	**Description**
0x8D0A	Bad DOS Version. Must have DOS 2.0, or later, to support the SNP DOS Driver.
0x8E0A	PC Serial port configured for SNP Master driver is not open; no communication can take place.
0x8F0A	Out–of–Sequence SNP message. SNP message type received was not the type expected.
0x900A	Bad SNP BCC encountered. Transmission was aborted after maximum retries due to a bad Block Check Code.
0x910A	Bad SNP communication. Transmission was aborted after maximum retries due to serial errors (that is, parity, overrun, or framing errors).
0x920A	No SNP communication. Either communication has been lost or a communication session has not been established.
0xC105	Invalid block state transition.
0xC205	The OEM key is NULL (inactive).
0xC305	Text length does not match traffic type.
0xC405	Verify with FA Card or EEPROM failed.
0xC505	No task–level Rack/Slot configuration to read or delete.
0xC605	Control Program (CP) tasks exist but requestor not logged into main CP.
0xC705	Passwords are set to inactive and cannot be enabled or disabled.
0xC805	Password(s) already enabled and can not be forced inactive.
0xC905	Login using non–zero buffer size required for block commands.
0xCA05	Device is write–protected.
0xCB05	A comm or write verify error occurred during save or restore.
0xCC05	Data stored on device has been corrupted and is no longer reliable.
0xCD05	Attempt was made to read a device but no data has been stored on it.
0xCE05	Specified device has insufficient memory to handle request.
0xCF05	Specified device is not available in the system (not present).
0xD005	One or more PLC modules configured have unsupported revision.
0xD105	Packet size or total program size does not match input.
0xD205	Invalid write mode parameter.
0xD305	User Program Module (UPM) read or write exceeded block end.
0xD405	Mismatch of configuration checksum.
0xD505	Invalid block name specified in datagram.
0xD605	Total datagram connection memory exceeded.
0xD705	Invalid datagram type specified.
0xD805	Point length not allowed.
0xD905	Transfer type invalid for this Memory Type selector.
0xDA05	Null pointer to data in Memory Type selector.
0xDB05	Invalid Memory Type selector in datagram.
0xDC05	Unable to find connection address.
0xDD05	Unable to locate given datagram connection ID.
0xDE05	Size of datagram connection invalid.
0xDF05	Invalid datagram connection address.

(PLC generated error codes for the GE 90-30 SNPX protocol continued on the next page.)

GE 90-30 SNPX Protocol – PLC Error Code Tables (cont'd)

PLC Errors for GE 90-30 SNPX Protocol (Minor-Major) (cont'd)	
Panel Error Code PLC-499 Hex Value	**Description**
0xE005	Service in process cannot login.
0xE105	No I/O configuration to read or delete.
0xE205	IOS could not delete configuration, or bad type.
0xE305	CPU revision number does not match.
0xE405	Memory Type for this selector does not exist.
0xE505	DOS file area not formatted.
0xE605	CPU model number does not match.
0xE705	Configuration is not valid.
0xE805	No user memory is available to allocate.
0xE905	Memory Type selector not valid in context.
0xEA05	Not logged in to process service request.
0xEB05	Task unable to be deleted.
0xEC05	Task unable to be created.
0xED05	VME bus error encountered.
0xEE05	Could not return block sizes.
0xEF05	Programmer is already attached.
0xF005	Request only valid in stop mode.
0xF105	Request only valid from programmer.
0xF205	Invalid program cannot log in.
0xF305	I/O configuration mismatch.
0xF405	Invalid input parameter in request.
0xF505	Invalid password.
0xF605	Invalid sweep state to set.
0xF705	Required to log in to a task for service.
0xF805	Invalid Task Name referenced.
0xF905	Task address out of range.
0xFA05	Cannot replace I/O module.
0xFB05	Cannot clear I/O configuration.
0xFC05	I/O configuration is invalid.
0xFD05	Unable to perform auto configuration.
0xFE05	No privilege for attempted operation.
0xFF05	Service Request Error has been aborted.

A

Mitsubishi FX Protocol – PLC Error Codes

Only errors as listed in the Touch Panel Error Code Table shown on page A-3 can occur when using the Mitsubishi FX protocol, there are no PLC generated errors.

Omron – Panel Error Code PLC-499 Explanation

The PLC-499 error code is used to show any errors that are generated by the connected PLC. The PLC-499 error message includes a four digit hexadecimal value embedded in the message. This value can be looked up in the specific PLC's error tables to determine the cause of the error. The possible PLC generated error codes for the Omron Host Link and FINS communication protocol are represented by a hexadecimal value as shown in the following message example.

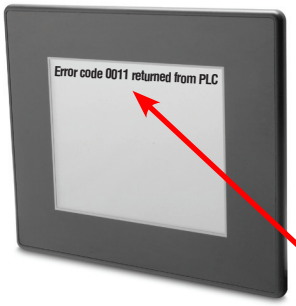

Omron Error Code PLC-499 Message Example:

Panel error code PLC-499 showing a hexadecimal value of 0011 indicates an "Framing error." PLC error when using the Omron Host Link protocol.

Omron Host Link Protocol – PLC Error Code Table

The following table lists the errors that can be generated by the Omron PLC when using the Host Link protocol.

Note: *The following errors can be generated from the designated PLC, are monitored by the* ***C-more*** *touch panel, and displayed on the touch panel's screen as a hexadecimal value in panel error code PLC-499 message, if active. Please refer to the PLC manufacturer's documentation for additional information.*

PLC Error Codes for Omron Host Link	
Panel Error Code PLC-499 Hex Value	**Description**
0x0000	Normal Completion.
0x0001	Not executable in RUN mode.
0x0002	Not executable in MONITOR mode.
0x0003	Not executable with PROM mounted.
0x0004	Address over (data overflow).
0x000B	Not executable in PROGRAM mode.
0x000C	Not executable in DEBUG mode.
0x000D	Not executable in LOCAL mode.
0x0010	Parity error.
0x0011	Framing error.
0x0012	Overrun.
0x0013	FCS error.
0x0014	Format error (parameter length error).
0x0015	Entry number data error (parameter error, data code error, data length error).
0x0016	Instruction not found.
0x0018	Frame length error.
0x0019	Not executable (due to Un-executable error clear, non-registration of I/O table, etc.).
0x0020	I/O table generation impossible (unrecognized remote I/O unit, channel over, duplication of optical transmitting I/O unit).
0x00A0	Abort due to parity error in transmit data under process.
0x00A1	Abort due to framing error in transmit data under process.
0x00A2	Abort due to overrun in transmit data under process.
0x00A3	Abort due to FCS error in transmit data under process.
0x00A4	Abort due to format error in transmit data under process.
0x00A5	Abort due to frame length error in transmit data under process.
0x00A8	Abort due to entry number data error in transmit data under process.
0x00B0	Un-executable due to program area capacity other than 16k bytes.

A

Omron FINS Protocol – PLC Error Code Table

The following table lists the errors that can be generated by the Omron PLC when using the FINS protocol.

Note: *The following errors can be generated from the designated PLC, are monitored by the* ***C-more*** *touch panel, and displayed on the touch panel's screen as a hexadecimal value in panel error code PLC-499 message, if active. Please refer to the PLC manufacturer's documentation for additional information.*

PLC Error Codes for Omron FINS	
Panel Error Code PLC-499 Hex Value	**Description**
0x0000	Normal Completion.
0x0001	Service Canceled.
0x0101	Local Error: Local node not in network.
0x0102	Local Error: Token Timeout.
0x0103	Local Error: Retries Failed.
0x0104	Local Error: Too many send frames.
0x0105	Local Error: Node address range error.
0x0106	Local Error: Node Address Duplication.
0x0201	Destination Node Error: Destination Node not in network.
0x0202	Destination Node Error: Unit Missing.
0x0203	Destination Node Error: Third Node missing.
0x0204	Destination Node Error: Destination Node busy.
0x0205	Destination Node Error: Response Timeout.
0x0301	Controller Error: Communications Controller Error.
0x0302	Controller Error: CPU Unit Error.
0x0303	Controller Error: Controller Error.
0x0304	Controller Error: Unit number Error.
0x0401	Service Unsupported: Undefined Command.
0x0402	Service Unsupported: Not supported by Model/Version.
0x0501	Routing Table Error: Destination address setting error.
0x0502	Routing Table Error: No routing tables.
0x0503	Routing Table Error: Routing table error.
0x0504	Routing Table Error: Too many delays.
0x1001	Command Format Error: Command too long.
0x1002	Command Format Error: Command too short.
0x1003	Command Format Error: Elements/Data don't match.
0x1004	Command Format Error: Command format error.
0x1005	Command Format Error: Header Error.
0x1101	Parameter Error: Area classification missing.
0x1102	Parameter Error: Access Size Error.
0x1103	Parameter Error: Address range error.

(PLC generated error codes for the Omron FINS protocol continued on the next page.)

Omron FINS Protocol – PLC Error Code Table (cont'd)

PLC Error Codes for Omron FINS	
Panel Error Code PLC-499 Hex Value	**Description**
0x1104	Parameter Error: Address range exceeded.
0x1106	Parameter Error: Program Missing.
0x1109	Parameter Error: Relational Error.
0x110A	Parameter Error: Duplicate Data Access.
0x110B	Parameter Error: Response too long.
0x110C	Parameter Error: Parameter Error.
0x2002	Read Not Possible: Protected.
0x2003	Read Not Possible: Table missing.
0x2004	Read Not Possible: Data missing.
0x2005	Read Not Possible: Program missing.
0x2006	Read Not Possible: File missing.
0x2007	Read Not Possible: Data mismatch.
0x2101	Write Not Possible: Read Only.
0x2102	Write Not Possible: Protected - cannot write data link table.
0x2103	Write Not Possible: Cannot register.
0x2105	Write Not Possible: Program missing.
0x2106	Write Not Possible: File missing.
0x2107	Write Not Possible: File name already exists.
0x2108	Write Not Possible: Cannot change.
0x2201	Not executable in current mode: Not possible during execution.
0x2202	Not executable in current mode: Not possible while running.
0x2203	Not executable in current mode: Wrong PLC mode (Program).
0x2204	Not executable in current mode: Wrong PLC mode (Debug).
0x2205	Not executable in current mode: Wrong PLC mode (Monitor).
0x2206	Not executable in current mode: Wrong PLC mode (Run).
0x2207	Not executable in current mode: Specified node not polling node.
0x2208	Not executable in current mode: Step cannot be executed.
0x2301	No such device: File device missing.
0x2302	No such device: Missing memory.
0x2303	No such device: Clock missing.
0x2401	Cannot Start/Stop: Table missing.
0x2502	Unit Error: Memory Error.
0x2503	Unit Error: I/O setting Error.
0x2504	Unit Error: Too many I/O points.
0x2505	Unit Error: CPU bus error.
0x2506	Unit Error: I/O Duplication.

(PLC generated error codes for the Omron FINS protocol continued on the next page.)

Omron FINS Protocol – PLC Error Code Table (cont'd)

PLC Error Codes for Omron FINS	
Panel Error Code PLC-499 Hex Value	**Description**
0x2507	Unit Error: I/O bus error.
0x2509	Unit Error: SYSMAC BUS/2 error.
0x250A	Unit Error: CPU Bus Unit Error.
0x250D	Unit Error: SYSMAC BUS No. duplication.
0x250F	Unit Error: Memory Error.
0x2510	Unit Error: SYSMAC BUS terminator missing.
0x2601	Command Error: No protection.
0x2602	Command Error: Incorrect password.
0x2604	Command Error: Protected.
0x2605	Command Error: Service already executing.
0x2606	Command Error: Service stopped.
0x2607	Command Error: No execution right.
0x2608	Command Error: Settings not complete.
0x2609	Command Error: Necessary items not set.
0x260A	Command Error: Number already defined.
0x260B	Command Error: Error will not clear.
0x3001	Access Right Error: No access right.
0x4001	Abort: Service aborted.

Omron – Panel Error Code P495 Explanation

The PLC-495 error code is used to show any errors that are generated by the connected PLC. The PLC-495 error message includes a four digit hexadecimal value embedded in the message. This value can be looked up in the specific PLC's error tables to determine the cause of the error. The possible PLC generated error codes for the Omron CS/CJ FINS ethernet communication protocol are represented by a hexadecimal value as shown in the following message example.

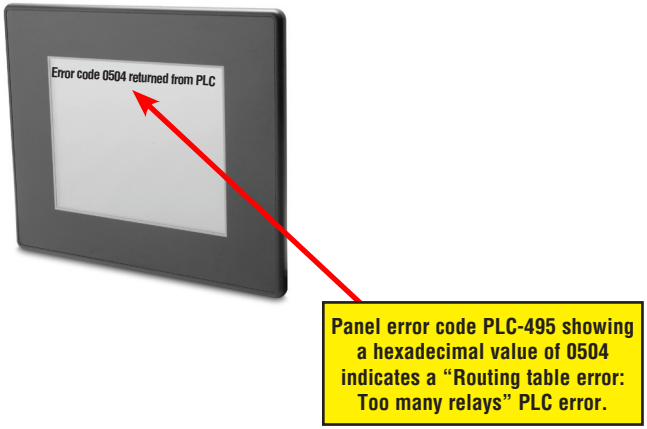

A

Omron CS/CJ FINS Ethernet Protocol – PLC Error Code Table

The following table lists the errors that can be generated by the Omron PLC when using the CS/CJ FINS Ethernet protocol.

Note: *The following errors can be generated from the designated PLC, are monitored by the* ***C-more*** *touch panel, and displayed on the touch panel's screen as a hexadecimal value in panel error code PLC-495 message, if active. Please refer to the PLC manufacturer's documentation for additional information.*

PLC Error Codes for Omron CS/CJ FINS Ethernet	
Panel Error Code PLC-495 Hex Value	**Description**
0103	Local Error: Send Error from lack of buffer space. Try reducing Ethernet load to the module.
0201	Destination Node Error: IP address of remote node not set correctly.
0202	Destination Node Error: No node with the specified unit address found.
0205	Destination Node Error: Packet corrupted or Response timeout. Try increasing timeout.
0301	Controller Error: Communications controller error.
0302	Controller Error: CPU Unit error. Check error LEDs on PLC. Refer to documentation for that CPU.
0304	Controller Error: Unit number error. Make sure Unit number is not used twice.
0401	Service unsupported: Undefined command.
0501	Routing table error: Destination address setting error. Routing table incorrect.
0502	Routing table error: No routing tables.
0503	Routing table error: Routing table error.
0504	Routing table error: Too many relays.
1001	Command format error: Command too long. Bad packet: check for electrical noise and grounding.
1002	Command format error: Command too short. Bad packet: check for electrical noise and grounding.
1003	Command format error: Elements/data don't match. Bad packet: check for electrical noise and grounding.
1005	Command format error: Header error. This is the error received when station # set in the command does not match the station # of the Ethernet module.
1100	Parameter error: UDP socket number bad.
1101	Parameter error: Address requested does not exist in PLC.
1103	Parameter error: Address area requested in not accessible.
220F	Status error: Duplicate Socket error.
2210	Status error: Specified socket not open.
2305	Environment Error: IP address conversion failed. Only encountered when using routing tables.
2307	Environment Error: IP address conversion set for automatic.
2503	Unit error: I/O setting error.
2505	Unit error: CPU bus error.
250A	Unit error: CPU Bus Unit error.

Siemens – Panel Error Code P499 Explanation

The PLC-499 error code is used to show any errors that are generated by the connected PLC. The PLC-499 error message includes a four digit hexadecimal value displayed at the end of the message. This value can be looked up in the specific PLC's error tables to determine the cause of the error. The possible PLC generated error codes for the Siemens PPI communication protocols breakdown into a four digit hexadecimal value as shown in the following message example.

Siemens Error Code PLC-499 Message Example:

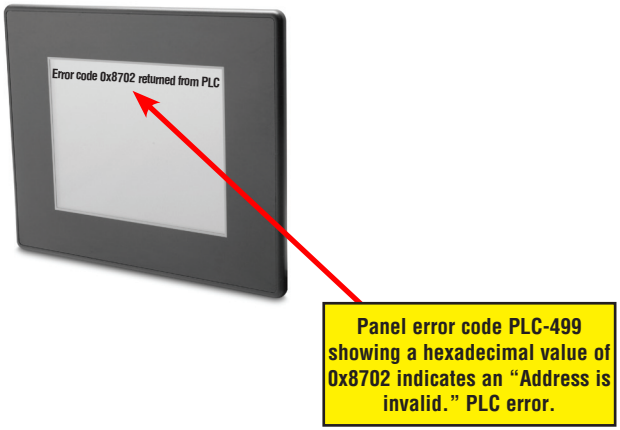

Siemens PPI Protocol – PLC Error Code Table

PLC PDU Header Errors for S7-200 PPI	
Panel Error Code PLC-499 Hex Value	**Description**
0x0001	Hardware Fault.
0x0003	Object access not allowed: Occurs when access to Timer and Counter data type is set to Signed Integer and not BCD.
0x0004	Context not supported.
0x0005	Address out of range: Occurs when requesting an address within a Data Block that does not exist or is out of range.
0x0006	Address out of range.
0x0007	Write Data size mismatch.
0x000A	Object does not exist: Occurs when trying to request a Data Block that does not exist.
0x8000	Function being used.
0x8001	Action is not allowed in current mode.
0x8101	Hardware fault.
0x8103	Access not allowed.
0x8104	Function not supported.
0x8105	Address invalid.
0x8106	Data Type not supported.
0x8107	Data Type is not consistent with size.
0x810A	Object does not exist.
0x8500	PDU Size is incorrect.
0x8702	Address is invalid.
0xD201	Block name syntax error.
0xD202	Error with function parameter.
0xD203	Error with block type.
0xD204	No linked block.
0xD205	Object already exists.
0xD206	Object already exists.
0xD207	Block already used in EPROM.
0xD209	Block does not exist.
0xD20E	No Block does not exist.
0xD210	Block number incorrect.

Siemens ISO over TCP Protocol – PLC Error Code Table

PLC PDU Header Errors for S7-200 CPU, S7-300, S7-1200 Ethernet	
Panel Error Code PLC-499 Hex Value	**Description**
0x0001	Hardware Fault.
0x0003	Object access not allowed: Occurs when access to Timer and Counter data type is set to Signed Integer and not BCD.
0x0004	Context not supported.
0x0005	Address out of range: Occurs when requesting an address within a Data Block that does not exist or is out of range.
0x0006	Address out of range.
0x0007	Write Data size mismatch.
0x000A	Object does not exist: Occurs when trying to request a Data Block that does not exist.
0x8000	Function being used.
0x8001	Action is not allowed in current mode.
0x8101	Hardware fault.
0x8103	Access not allowed.
0x8104	Function not supported.
0x8105	Address invalid.
0x8106	Data Type not supported.
0x8107	Data Type is not consistent with size.
0x810A	Object does not exist.
0x8500	PDU Size is incorrect.
0x8702	Address is invalid.
0xD201	Block name syntax error.
0xD202	Error with function parameter.
0xD203	Error with block type.
0xD204	No linked block.
0xD205	Object already exists.
0xD206	Object already exists.
0xD207	Block already used in EPROM.
0xD209	Block does not exist.
0xD20E	No Block does not exist.
0xD210	Block number incorrect.

Touch Panel Runtime Errors

In this Appendix...

Introduction B-2
Runtime Errors B-3

Introduction

The *C-more* touch panels have diagnostics built-in to the operating system that monitor various runtime functions that will display an error message on the panel's display indicating that a particular error has occurred and what the error represents. The **Error Message(s)** is displayed in the upper left area of the display screen. The **Runtime Errors** are also logged into the panel's **Error** log under the **Information** tab in the panel's **System Setup Screens**. The **Error Log Code**, such as **RTE-031**, is how the error is identified in the error log. See **Chapter 5: System Setup Screens** for additional details. The tables that follow show the possible **Runtime Errors** and include the error message, log error code, tag error code value, cause, etc.

The user can include in their touch panel project the use of this diagnostic information by using the system tag name **SYS ERR ERRORCODE** to control displayed screens, operator messages, etc., and also communicate error information to the PLC or controlling device. If a runtime error occurs, the **SYS ERR ERRORCODE** system tag will contain the numeric value shown under the **Tag Code Error Value**. For example, if a **Low Battery** runtime error is indicated, then the screen display will show **Low Battery** and the **SYS ERR ERRORCODE** system tag will contain the value **2031**. The value of the last runtime error detected will remain in the **SYS ERR ERRORCODE**.

If you have difficulty determining the cause of the error, refer to **Chapter 8: Troubleshooting** for additional help or contact our technical support group at 770-844-4200

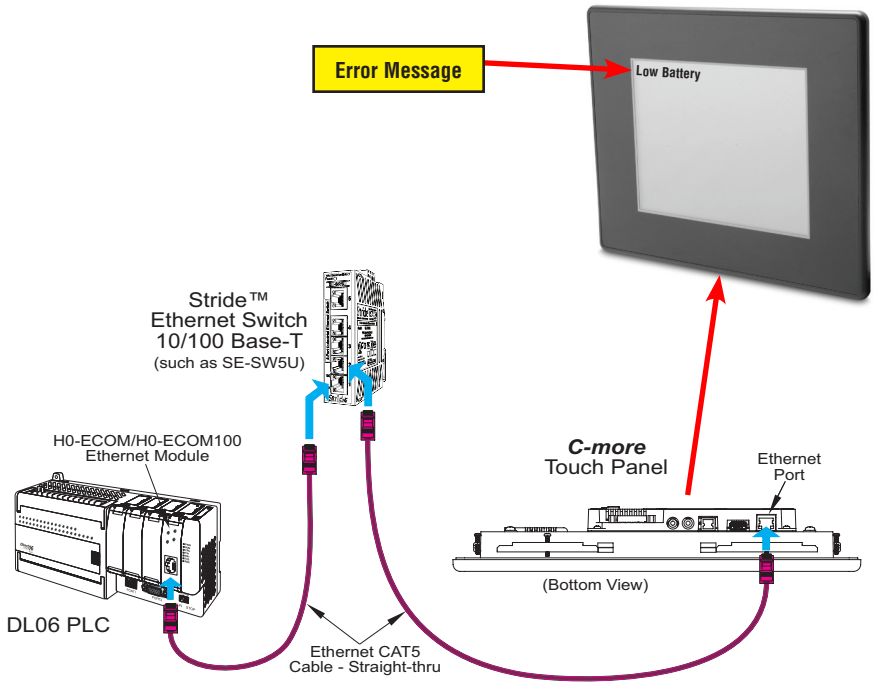

Runtime Errors

If there is more than one **Runtime Error**, then the **Error Message** displayed at the top of the panel's screen will display for 3 seconds, then be off for 2 seconds. The next **Error Message** will display for the same time increments, continue through any other active runtime error messages, and then start over. When only one **Runtime Error** is active, then that message will continuously be displayed until it is no longer active.

No.	Error Log Code	Error Message Located at upper left of screen	Error Message Tag	Tag Error Code Value	System Screen Info > Error	Cause
Log Error						
1	RTE-001	Log Failed. Not enough Memory Space in %Device%	SYS ERR ERRORCODE	2001	MM/DD/YY HH/MM/SS Error Code RTE-001	The size of the destination memory is not large enough to store the data. See Log File Naming below.
2	RTE-002	Log Failed. %Device% cannot be found	SYS ERR ERRORCODE	2002	MM/DD/YY HH/MM/SS Error Code RTE-002	No device available or the device is defective. See Log File Naming below.
3	RTE-003	Log Failed. Can not write file - %file%	SYS ERR ERRORCODE	2003	MM/DD/YY HH/MM/SS Error Code RTE-003	Logging the data has failed due to a problem such as the memory write protect is enabled. See Log File Naming below.
4	RTE-004	Log cache memory is full	SYS ERR ERRORCODE	2004	MM/DD/YY HH/MM/SS Error Code RTE-004	The data log buffer in the SRAM memory is full. See Log File Naming below.
Screen Capture						
1	RTE-011	Capture Failed. Not enough Memory Space in %Device%	SYS ERR ERRORCODE	2011	MM/DD/YY HH/MM/SS Error Code RTE-011	The size of the destination memory is not large enough to store the data.
2	RTE-012	Capture Failed. %Device% cannot be found	SYS ERR ERRORCODE	2012	MM/DD/YY HH/MM/SS Error Code RTE-012	No device available or the device is defective.
3	RTE-013	Capture Failed. Can not write file - %file%	SYS ERR ERRORCODE	2013	MM/DD/YY HH/MM/SS Error Code RTE-013	Logging the data has failed due to a problem such as the memory write protect is enabled.

Table continued

Log File Naming

The Log file name is formed automatically in the panel. The visible file name has the format:

Screen Name + "_" + Object name + "_" + Date Stamp YYMMDD + ".txt"

Internal to the panel, the file references are stored as the first four characters of the file name + "~" + a serial number between 000 and 999 + ".txt" So, any "group" of filenames is limited to 999 members.

For Example: The following filenames form the same group. All filenames start with "**Scre**":

Screen1_Trend1_yymmdd.txt
Screen2_Trend2_yymmdd.txt
Screen3_Trend3_yymmdd.txt

If an attempt is made to store more than 999 files in a "group" the panel will return RTE-001, RTE-002, RTE-003 or RTE-004.

Visible File Name	Internal File Name
Screen1_Trend1_150101.txt	**SCRE**~001.TXT
Screen2_Trend2_150101.txt	**SCRE**~002.TXT
Screen3_Trend3_150101.txt	**SCRE**~003.TXT
Screen1_Trend1_150102.txt	**SCRE**~004.TXT
Screen2_Trend2_150102.txt	**SCRE**~005.TXT
Screen3_Trend3_150102.txt	**SCRE**~006.TXT
...	
Screen1_Trend1_151129.txt	**SCRE**~997.TXT
Screen2_Trend2_151129.txt	**SCRE**~998.TXT
Screen3_Trend3_151129.txt	**SCRE**~999.TXT
Screen1_Trend3_151130.txt	Runtime Error RTE-001

Workaround: To minimize membership in any one group, change the Screen name and the Object name so the first four characters of the visible file name are unique

For example,

Screen Names: S1, S2

Object Names: AAA, BAA

Visible File Name	Internal File Name
S1_AAA_150101.txt	**S1_A**~001.TXT
S1_BAA_150101.txt	**S1_B**~001.TXT
S2_AAA_150101.txt	**S2_A**~001.TXT
S2_BAA_150101.txt	**S2_B**~001.TXT
S1_AAA_150102.txt	**S1_A**~002.TXT
S1_BAA_150102.txt	**S1_B**~002.TXT
S2_AAA_150102.txt	**S2_A**~002.TXT
S2_BAA_150102.txt	**S2_B**~002.TXT
…	
S1_AAA_151231.txt	**S1_A**~365.TXT
S1_BAA_151231.txt	**S1_B**~365.TXT
S2_AAA_151231.txt	**S2_A**~365.TXT
S2_BAA_151231.txt	**S2_B**~365.TXT

Note that there is no conflict between file names and since no log group will exceed 365 (days) the 999 member limit is never exceeded.

Runtime Errors (cont'd)

No.	Error Log Code	Error Message Located at upper left of screen	Error Message Tag	Tag Error Code Value	System Screen Info > Error	Cause
Handshake						
1	RTE-021	Handshake Timeout Error	SYS ERR ERRORCODE	2021	MM/DD/YY HH/MM/SS Error Code RTE-021	A communications timeout occurred when either a Recipe or Numeric Entry Object, in which Notification and Handshake signals are used, failed to complete the responses.
Battery						
1	RTE-031	Low Battery	SYS ERR ERRORCODE	2031	MM/DD/YY HH/MM/SS Error Code RTE-031	The panel's backup battery voltage level has fallen below 1.8 VDC and should be replaced.
e-mail						
1	RTE-041	E-mail Connection Error %Address%	SYS ERR ERRORCODE	2041	MM/DD/YY HH/MM/SS Error Code RTE-041	An incorrect SMTP address has been entered into the Touch Panel Network dialog screen.
2	RTE-042	Send E-mail Error %Address%	SYS ERR ERRORCODE	2042	MM/DD/YY HH/MM/SS Error Code RTE-042	An incorrect email address has been entered into the Address Book.
Send FTP						
1	RTE-051	FTP Connection Error %Address%&%ID%	SYS ERR ERRORCODE	2051	MM/DD/YY HH/MM/SS Error Code RTE-051	An incorrect FTP Service has been assigned into the Touch Panel Network dialog screen.
2	RTE-052	Send FTP Error %Address%&%ID%	SYS ERR ERRORCODE	2052	MM/DD/YY HH/MM/SS Error Code RTE-052	Permission to write to the FTP folder has not been authorized. The FTP site may require a user ID and password.
Sound						
1	RTE-081	Sound Failed. Not enough Memory	SYS ERR ERRORCODE	2081	MM/DD/YY HH/MM/SS Error Code RTE-081	The sound file failed to play due to insufficient memory.
Confiict						
1	RTE-091	IP Address Conflict - Corrct IP Address and Power Cycle	SYS ERR ERRORCODE	2091	MM/DD/YY HH/MM/SS Error Code RTE-091	Conflict of IP Address

Runtime Errors (cont'd)

No.	Error Log Code	Error Message Located at upper left of screen	Error Message Tag	Tag Error Code Value	System Screen Info > Error	Cause
Multiple Recipe						
1	RTE-101	Record doesn't exist	SYS ERR ERRORCODE	2101	MM/DD/YY HH/MM/SS Error Code RTE-101	The recipe file or data doesn't exist.
2	RTE-102	File cannot open	SYS ERR ERRORCODE	2102	MM/DD/YY HH/MM/SS Error Code RTE-102	The recipe file cannot be opened.
3	RTE-103	E-mail Connection Error %Address%	SYS ERR ERRORCODE	2103	MM/DD/YY HH/MM/SS Error Code RTE-103	Abnormality is found in the numberic character data of the recipe file.
4	RTE-104	Send E-mail Error %Address%	SYS ERR ERRORCODE	2104	MM/DD/YY HH/MM/SS Error Code RTE-104	Abnormality is found in the Tag data of the recipe file.
5	RTE-105	Recipe - Index (%Row%) error	SYS ERR ERRORCODE	2105	MM/DD/YY HH/MM/SS Error Code RTE-105	Recipe was operated by the record number outside the range.
6	RTE-106	Not enough buffer memory	SYS ERR ERRORCODE	2106	MM/DD/YY HH/MM/SS Error Code RTE-106	Memory allocation error
7	RTE-107	File cannot write	SYS ERR ERRORCODE	2107	MM/DD/YY HH/MM/SS Error Code RTE-107	There was an error trying to write the recipe file.
8	RTE-108	Wrong file format	SYS ERR ERRORCODE	2108	MM/DD/YY HH/MM/SS Error Code RTE-108	The recipe file format is incorrect.
9	RTE-109	Not enough Memory Space in %Device%	SYS ERR ERRORCODE	2109	MM/DD/YY HH/MM/SS Error Code RTE-109	Insufficient storage space on media.
Action						
1	RTE-121	Action Overflows	SYS ERR ERRORCODE	2121	MM/DD/YY HH/MM/SS Error Code RTE-121	The number of actions executed in the event exceeded the maximum number.
SRAM Error						
1	RTE-500	SRAM Check Sum Error	SYS ERR ERRORCODE	2500	MM/DD/YY HH/MM/SS Error Code RTE-500	Memory in Panel has been Corrupted by Power Loss, etc.

Mounting Clips Prior April 2006

In this Appendix...

Introduction C-2
EA7-S6M-R, S6C-R, S6M, S6C and T6C Original Mounting Clips C-3
EA7-S6M-R, S6C-R, S6M, S6C and T6C Original Mounting Clips C-4
EA7-T8C Original Mounting Clips C-5
EA7-T8C Original Mounting Clips C-6
EA7-T10C Original Mounting Clips C-7
EA7-T10C Original Mounting Clips C-8
EA7-T12C Original Mounting Clips C-9
EA7-T12C Original Mounting Clips C-10
EA7-T15C Original Mounting Clips C-11

Introduction

The mounting clips supplied with *C-more* touch panels after April 2006 are slightly different than the original clips. **Appendix C: Mounting Clips Prior April 2006** has been included in the Hardware User Manual for the end user to have a reference to the drawings and information pertaining to the original mounting clips. The enclosure mounting thickness range and screw torque range has remained the same for each type of touch panel. The basic physical construction and use of the mounting clips remains the same, as does the various touch panel cutout dimensions.

The 6" touch panels use two long style mounting clips. The new 6" mounting clips have been redesigned to increase rigidity and also the screw position height has been increased to allow easier placement in the touch panel slots on thicker enclosures.

The 8"-15" touch panels, depending on the panel's size, use either 6 or 8 smaller style mounting clips. The new 8"-15" mounting clips have been made shorter in height to allow easier installation. Their rigidity remains the same.

Original
6" Mounting Clips

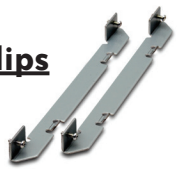

Original
8-15" Mounting Clip

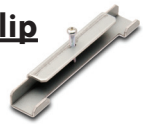

Newer
6" Mounting Clips

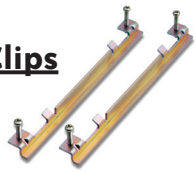

Newer
8-15" Mounting Clip

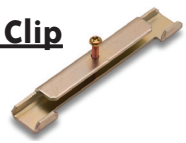

EA7-S6M-R, S6C-R, S6M, S6C and T6C Original Mounting Clips

Dimensions:

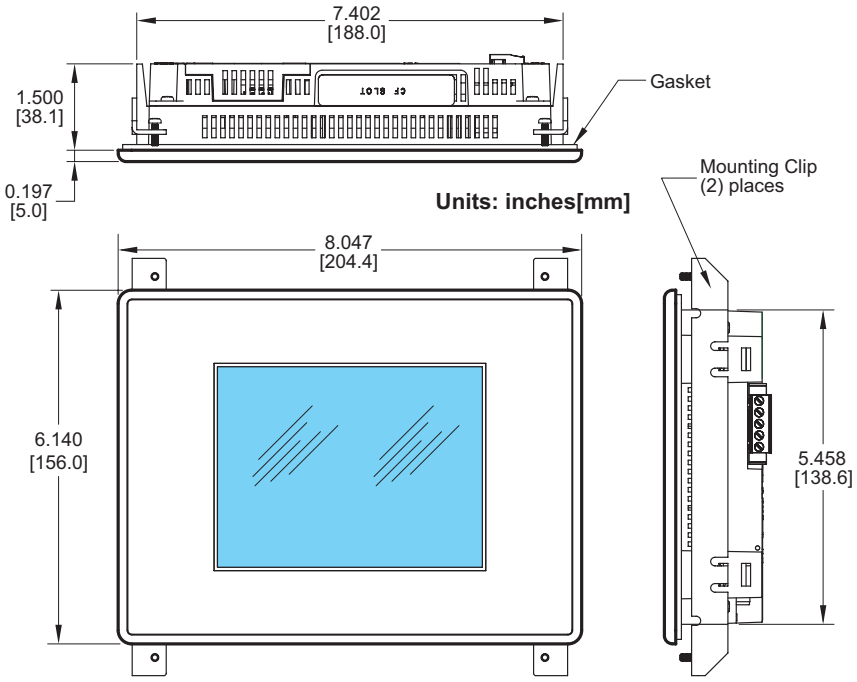

Enclosure Mounting Thickness Ranges and Mounting Clip Screw Torque

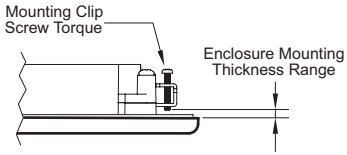

Touch Panel Size	Enclosure Thickness Range	Mounting Clip Screw Torque
6" – lower mounting clip position	0.039 - 0.24 inch [1 – 6 mm]	35 ~ 50 oz-in [0.25 ~ 0.35 Nm]
6" – upper mounting clip position	0.20 - 0.63 inch [5 – 16 mm]	35 ~ 50 oz-in [0.25 ~ 0.35 Nm]

EA7-S6M-R, S6C-R, S6M, S6C and T6C Original Mounting Clips

Cutout Dimensions:

C

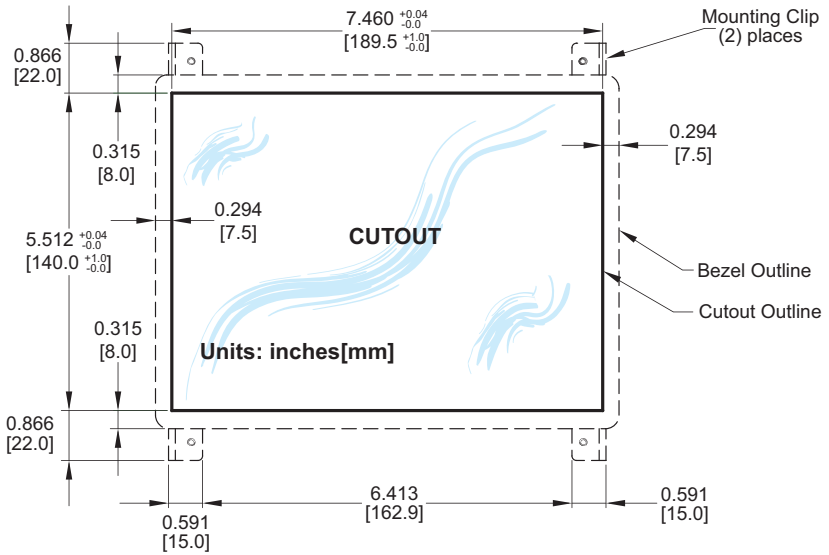

EA7-T8C
Original Mounting Clips

Dimensions:

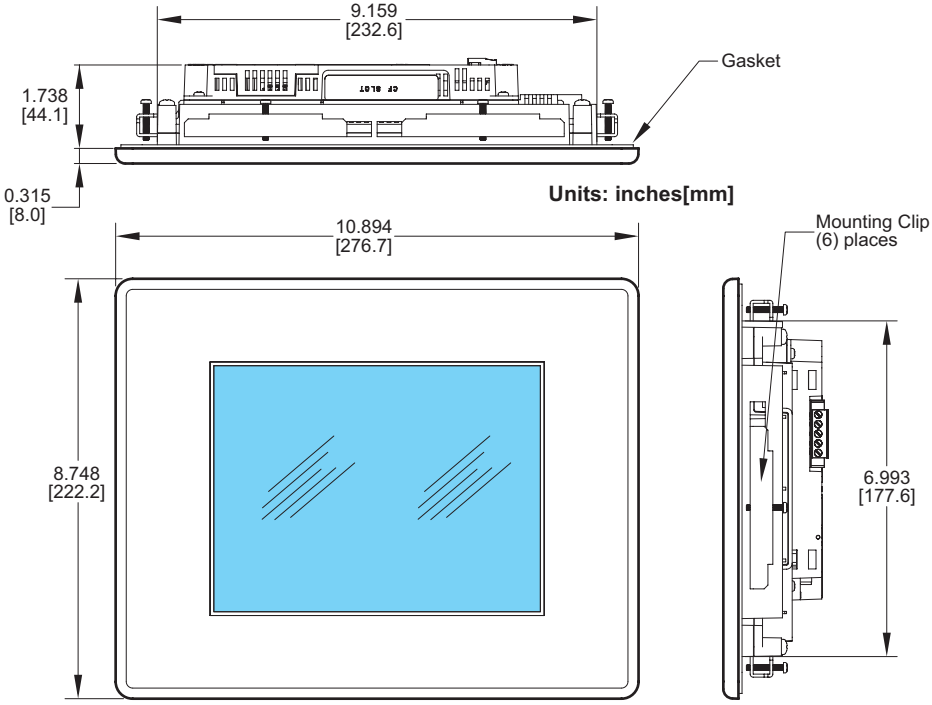

Enclosure Mounting Thickness Ranges and Mounting Clip Screw Torque

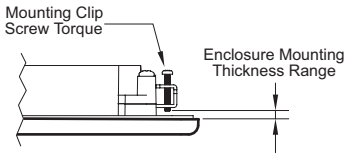

Touch Panel Size	Enclosure Thickness Range	Mounting Clip Screw Torque
8", 10", 12" & 15"	0.039 - 0.20 inch [1 – 5 mm]	42 ~ 57 oz-in [0.3 ~ 0.4 Nm]

C

EA7-T8C
Original Mounting Clips

Cutout Dimensions:

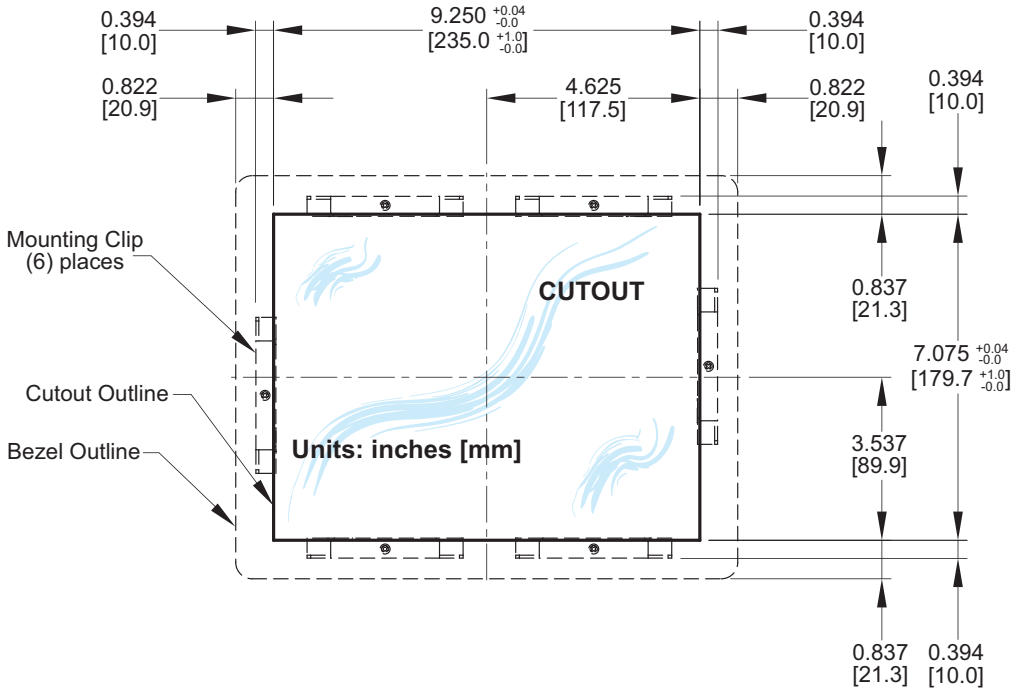

EA7-T10C
Original Mounting Clips

Dimensions:

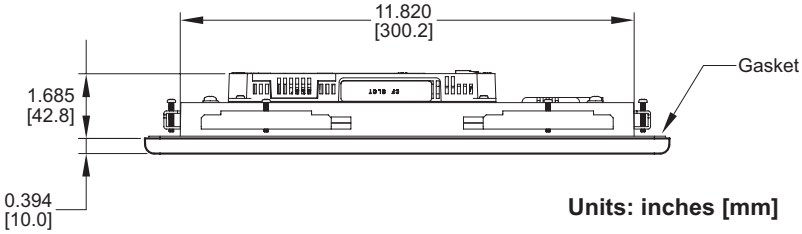

Units: inches [mm]

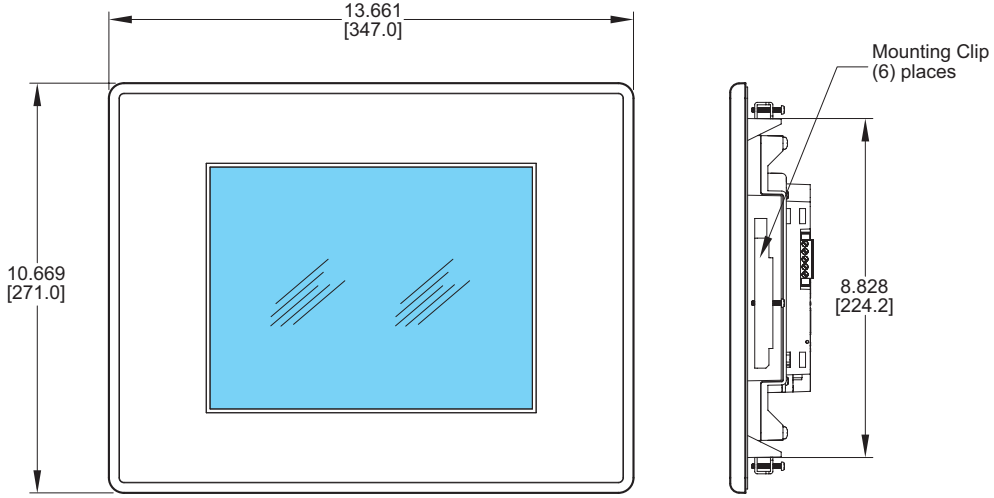

Enclosure Mounting Thickness Ranges and Mounting Clip Screw Torque

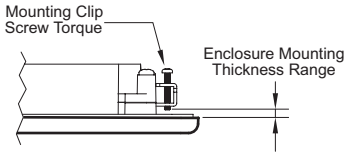

Touch Panel Size	Enclosure Thickness Range	Mounting Clip Screw Torque
8", 10", 12" & 15"	0.039 - 0.20 inch [1 – 5 mm]	42 ~ 57 oz-in [0.3 ~ 0.4 Nm]

C

EA7-T10C
Original Mounting Clips

Cutout Dimensions:

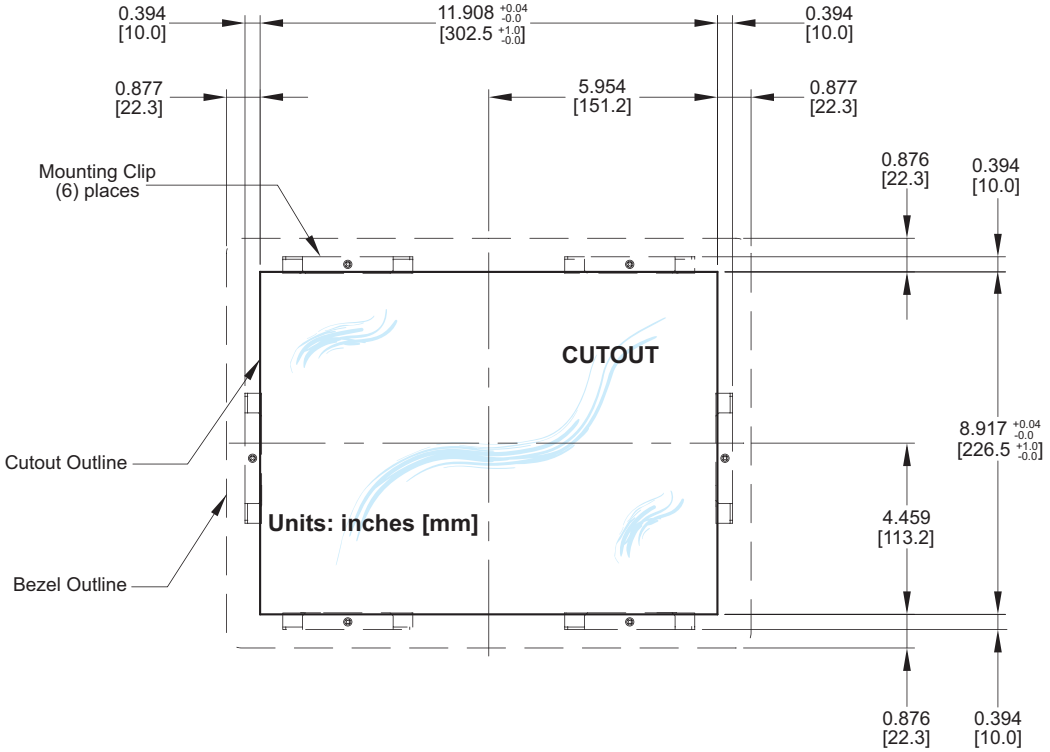

EA7-T12C
Original Mounting Clips

Dimensions:

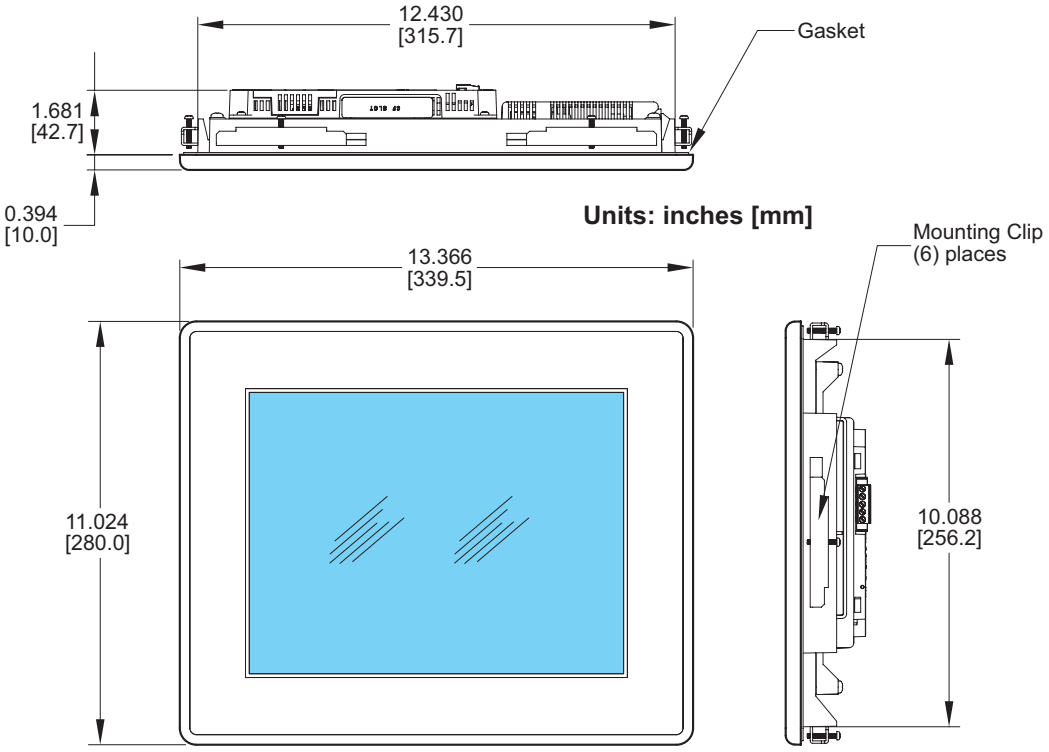

Enclosure Mounting Thickness Ranges and Mounting Clip Screw Torque

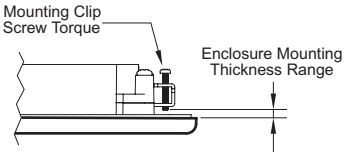

Touch Panel Size	Enclosure Thickness Range	Mounting Clip Screw Torque
8", 10", 12" & 15"	0.039 - 0.20 inch [1 – 5 mm]	42 ~ 57 oz-in [0.3 ~ 0.4 Nm]

EA7-T12C
Original Mounting Clips

Cutout Dimensions:

C

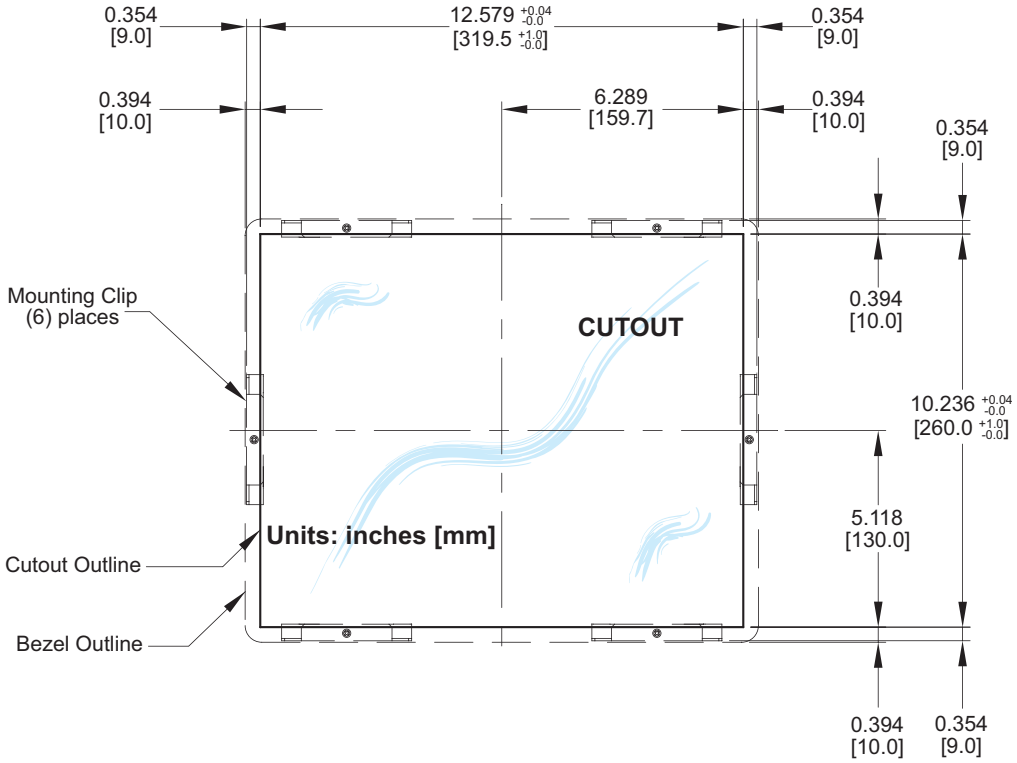

EA7-T15C
Original Mounting Clips

Dimensions:

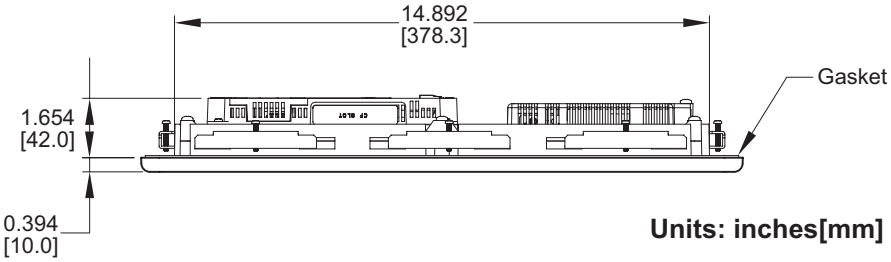

Units: inches[mm]

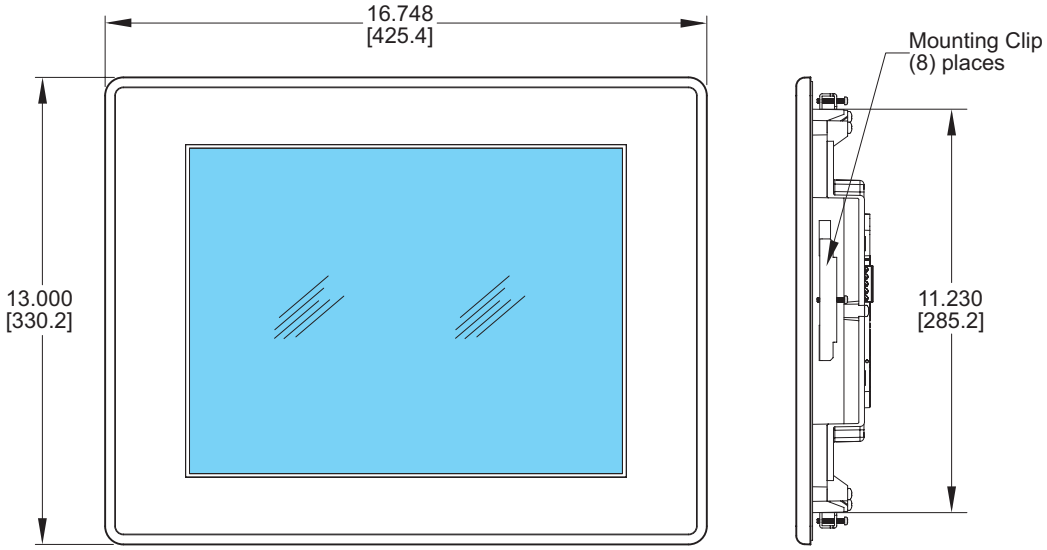

Enclosure Mounting Thickness Ranges and Mounting Clip Screw Torque

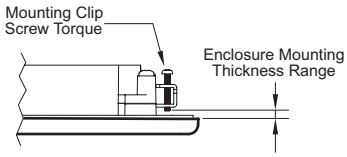

Touch Panel Size	Enclosure Thickness Range	Mounting Clip Screw Torque
8", 10", 12" & 15"	0.039 - 0.20 inch [1 – 5 mm]	42 ~ 57 oz-in [0.3 ~ 0.4 Nm]

EA7-T15C
Original Mounting Clips

Cutout Dimensions:

C

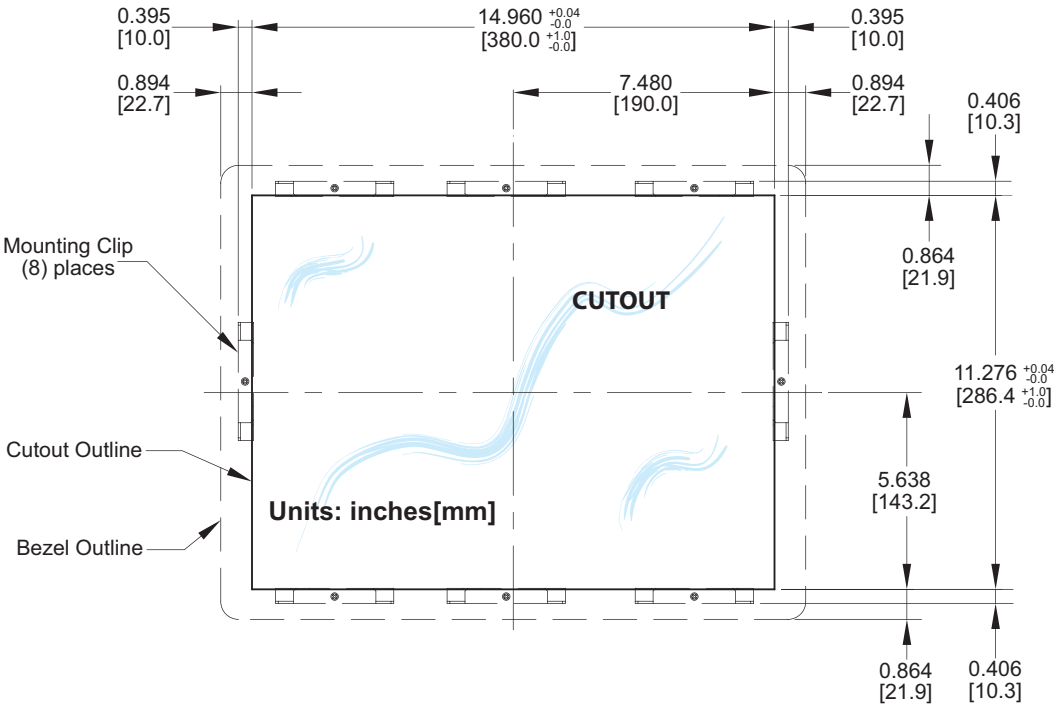

Security Considerations for Control Systems Networks

In This Appendix...

Security Considerations for Control Systems Networks..... D-2

Security Considerations for Control Systems Networks

Manufacturers are realizing that to stay competitive, their Automation and Control Systems need to be more integrated within their plant. The systems often need to be integrated with upstream Enterprise Data Systems, and even further integrated to allow information to be accessible across multiple plants, or even through the Internet. This convergence of the IT world with the Automation World creates challenges in maintaining secure systems and protecting your investments in processes, personnel, data and intellectual property.

While Automation Networks and Systems have built-in password protection schemes, this is only one very small step in securing your systems. Automation Control System Networks need to incorporate data protection and security measures that are at least as robust as a typical business computer system. We recommend that users of PLCs, HMI products and SCADA systems perform your own network security analysis to determine the proper level of security required for you application. However, the Department of Homeland Security's National Cybersecurity and Communications Integration Center (NCCIC) and Industrial Control Systems Cyber Emergency Response Team (ICS-CERT) has provided direction related to network security and safety under an approach described as "Defense in Depth", which is published at https://ics-cert.us-cert.gov/sites/default/files/recommended_practices/NCCIC_ICS-CERT_Defense_in_Depth_2016_S508C.pdf.

This comprehensive security strategy involves physical protection methods, as well as process and policy methods. This approach creates multiple layers and levels of security for industrial automation systems. Such safeguards include the location of control system networks behind firewalls, their isolation from business networks, the use of intrusion detection systems, and the use of secure methods for remote access such as Virtual Private Networks (VPNs). Further, users should minimize network exposure for all control system devices and such control systems and these systems should not directly face the internet. Following these procedures should significantly reduce your risks both from external sources as well as internal sources, and provide a more secure system.

It is the user's responsibility to protect such systems, just as you would protect your computer and business systems. AutomationDirect recommends using one or more of these resources in putting together a secure system:

- ICS-CERT's Control Systems recommended practices at the following web address: https://ics-cert.us-cert.gov/Recommended-Practices
- Special Publication 800-82 of the National Institute of Standards and Technology – Guide to Industrial Control Systems (ICS) Security: https://csrc.nist.gov/publications/detail/sp/800-82/rev-2/final
- ISA99, Industrial Automation and Control Systems Security https://www.isa.org/MSTemplate.cfm?MicrositeID=988&CommitteeID=6821 (please note this is a summary and these standards have to be purchased from ISA)

The above set of resources provides a comprehensive approach to securing a control system network and reducing risk and exposure from security breaches. Given the nature of any system that accesses the internet, it is incumbent upon each user to assess the needs and requirements of their application and take steps to mitigate the particular security risks inherent in their control system

INDEX

6" Adapter Plate, 4–9
6" Adapter Plate Assembly, 3–18
6" Adapter Plate Cutout Dimensions, 3–17, 4–10
6" Adapter Plate Dimensions, 3–17, 4–10
6" Adapter Plate Installation, 3–18

A

AC Wiring Diagram, 4–14
AC/DC power adapter, 1–4
AC/DC Power Adapter, 3–5
AC/DC Power Adapter Dimensions, 3–7
AC/DC Power Adapter Installation, 3–8
AC/DC Power Adapter Specifications, 3–6
AC/DC Power Adapter Wiring, 3–5
Accessories, 3–2
Accessories at a glance, 3–4
Accessories Overview, 3–3
Adapter Plate, 3–17
Agency Approvals, 4–12
Analog touch screen, 1–4
Available Models, 2–2

C

C-more Touch Panel Error Code Table, A–3
CF Card Interface Module, 3–12
CF Card Interface Module Installation, 3–13
Chemical Compatibility, 2–27
Comm Port Adapter, 3–19

Communications Ports, 2–21
Ethernet Port, 2–21
PLC Port, 2–22
Sound Interface (Audio Line Out), 2–22
USB Port A, 2–22
USB Port B, 2–22
CompactFlash Memory, 3–14
CompactFlash Memory Card Installation, 3–15
Conventions Used, 1–3
Cutout Dimensions, 4–4
EA7-T10C, 4–6
EA7-T12C, 4–7
EA7-T15C, 4–8
EA7-T8C, 4–5
cutout template, 4–3

D

Data Logging - Memory Device Full, 2–26
Data Logging Function and Logging Media, 2–26
Date Code, 1–5
DC Wiring Diagram, 4–13
Dimensions, 2–10
EA7-S6M-R, S6C-R, T6CL-R, S6M, S6C, T6C, T6CL, 2–10
EA7-T10C, 2–14
EA7-T12C, 2–16
EA7-T15C, 2–18
EA7-T8C, 2–12
DirectLOGIC PLCs Password Protection, 6–2

E

E-mail client, 1–4
EA-AC, 1–15
Enclosure Mounting Thickness Ranges, 4–4, 4–5, 4–6, 4–7, 4–8
Error Log Code, B–2
Error Message(s), B–2
Event Manager, 1–4

Expansion Assembly, 3–9
Expansion Assembly Details, 3–9
Expansion Assembly Dimensions, 3–9
Expansion Assembly Installation, 3–10
External Memory Devices, 2–25
EZTouch, 4–9
EZTouch Conversion and Mounting, 1–6
EZTouch Touch Panel Cross Reference to C-more, 1–7

F

FTP client/server, 1–4

I

Installation and Wiring, 4–3
Introduction, 4–3

L

LED Status Indicator, 4–13

M

Maintenance, 7–2
Adjust Touch Panel, 7–4
Check Error Log, 7–4
Check Memory Usage, 7–4
Check Physical Conditions, 7–3
Check Project Functionality, 7–6
Check/Adjust Display Brightness or Contrast, 7–4
Checks from C-more Programming Software, 7–6
Cleaning the Display Screen, 7–5
CPU LED indicator, 7–2
Operating Environment, 7–2
Operating Voltage, 7–2
Power LED (PWR) indicator, 7–2
Project Backup, 7–2
Replace Battery Periodically, 7–5
Run Tests under System Setup Screens, 7–3

Status Indicators, 7–2
Test Beeper/Sound, 7–3
Test Comm. Port, 7–3
Test Display, 7–3
Test Touch Panel, 7–3
TxD and RxD LED, 7–2
Marine Use, 4–12
Memory Menu, 5–35
Backup, 5–37
Project Executed from CompactFlash (CF Slot #1), 5–36
Memory Organization, 2–24
Model Specifications, 2–3
Mounting Clearances, 2–20, 4–11
6" Adapter Plate Assembly, 4–9
air flow, 4–11
Mounting Clip Screw Torque, 2–10, 2–12, 2–14, 2–16, 2–18, 4–4, 4–5, 4–6, 4–7, 4–8
mounting clips, 4–3
Mounting Clips, 1–3
New Style, 1–3
Mounting Clips Prior April 2006, C–2
EA7-S6M-R, S6C-R, S6M, S6C and T6C, C–3
EA7-T10C, C–7
EA7-T12C, C–9
EA7-T15C, C–11
EA7-T8C, C–5
Mounting Thickness Ranges, 2–10, 2–12, 2–14, 2–16, 2–18

P

Panel Depth, 3–2, 3–7, 3–9, 3–19
AC/DC Power Adapter Installed, 3–7
Expansion Assembly Installed, 3–9
Panel Error Code P495, A–37
Omron, A–37
Panel Error Code PLC-496, 497 and 498, A–11
Allen-Bradley EtherNet/IP Protocol, A–11
Panel Error Code PLC-499, A–5
Allen-Bradley, A–8

DirectLOGIC, A–5
Modbus Protocols, A–6
AutomationDirect CLICK, A–6
AutomationDirect DirectLOGIC - Modbus (Koyo), A–6
Entivity Modbus RTU, A–6
Modicon Modbus RTU, A–6
Omron, A–32
Productivity3000 Error Code P499, A–7
Siemens, A–39
Part Number Key, 1–5
PLC Communication Cables & Wiring Diagrams, 6–5, 6–6
PLC Error Codes
Allen-Bradley – EtherNet/IP Protocol, A–12
Allen-Bradley DF1 & DH485 Protocols, A–9
DirectLOGIC K-Sequence Protocol, A–5
GE 90-30 SNPX Protocol, A–23
Generic EtherNet IP Protocol, A–21
Mitsubishi FX Protocol, A–32
Modbus Protocols, A–6
AutomationDirect CLICK, A–6
AutomationDirect DirectLOGIC - Modbus (Koyo), A–6
Entivity Modbus RTU, A–6
Modicon Modbus RTU, A–6
Omron CS/CJ FINS Ethernet Protocol, A–38
Omron FINS Protocol, A–34
Omron Host Link Protocol, A–33
Siemens ISO over TCP Protocol, A–41
Siemens PPI Protocol, A–40
PLCs and protocols, 6–2
Allen-Bradley, 6–22
AutomationDirect PLCs RS-232C Serial, 6–7
AutomationDirect PLCs RS-422A/RS-485A, 6–10
Direct LOGIC Universal Converter, p/n F2-UNICON, 6–17
Direct LOGIC Universal Isolated Network Adapter, p/n FA-ISOCON, 6–16
GE, 6–27
GE VersaMax Micro, 6–27
Mitsubishi, 6–27

Modicon Micro Series, 6–30
Modicon ModBus RS-232, 6–30
Modicon ModBus with RJ45, 6–30
Omron, 6–29
Siemens, 6–31
Ports & Memory Expansion, 2–11, 2–13, 2–15, 2–17, 2–19
Power Fault, 4–14
Power Loss Detection and Power Retention Period, 2–26
Product Overview, 1–4
Products with CE marks, 4–2
Providing Power to the Touch Panel, 4–13

Q

Quick Start Steps, 1–9
Step 1 – Unpack and Inspect, 1–9
Step 10 – Install the Programming Software and Develop a Project, 1–13
Step 2 – Assemble Temporary Support Stand, 1–10
Step 3 – Install Optional Hardware Accessories, 1–11
Step 4 – Become Familiar with Available Communication Ports, 1–12
Step 5 – Connect Touch Panel to Computer, 1–14
Step 6 – Provide Power to the Touch Panel, 1–15
Step 7 – Access the Touch Panel Setup Screens, 1–16
Step 8 – Choose Touch Panel to PLC Protocol & Cables, 1–17
Step 9 – Connect Touch Panel to PLC, 1–20

R

Replacement Parts, 9–1
6-15" Panel Gasket Replacements – EA-xx-GSK, 9–11
Installation Instructions, 9–11
6" Adapter Plate Gasket Replacement – EA-6-ADPTR-GSK, 9–14
Gasket Replacement Instructions, 9–14
6" Panel Mounting Clip Replacements – EA-BRK-1, 9–5
Installation Instructions, 9–5
8-15" Panel Backlight Bulb Replacements – EA-xx-BULB, 9–8
Installation Instructions Example, 9–8
8-15" Panel Bezel Replacement – EA-xx-BEZEL, 9–12
Replacement Instructions Example, 9–12

8–15” Panel Mounting Clip Replacements– EA-BRK-2, 9–6
Installation Instructions, 9–6
AC Power Adapter Connector Replacement– EA-AC-CON, 9–7
Battery Replacement – D2-BAT-1, 9–3
Battery Replacement Instructions, 9–3
DC Panel Power Connector Replacement – EA-DC-CON, 9–7
Replacement Parts at a Glance, 9–2
Replacement Parts Overview, 9–2
RS-422A/RS-485A Multi-Drop Wiring Diagram Examples, 6–16
Runtime Errors, B–3
Introduction, B–2

S

Safety Guidelines, 4–2
Screen Covers, 3–22
Non-glare, 3–22
Serial Number, 1–5
Setting Menu, 5–19
Adjust Clock, 5–20
Adjust Display, 5–21
Beeper, 5–23
IP Address Setting, 5–24
Specification, 2–4, 2–6
12” and 15” Full Feature Models, 2–9
6” Base Feature Models, 2–4
6” Full Feature Models, 2–5
6” Obsolete Models, 2–6
8” and 10” Full Feature Models, 2–8
Supplemental Manuals, 1–2
SYS ERR ERRORCODE, B–2
System Setup Screens, 5–1
Error tab, 5–18
Flowchart, 5–13
General tab, 5–15
Information, 5–15, 5–16, 5–17, 5–18
Main Menu, 5–14
Memory tab, 5–16

Ports tab, 5–17

T

Tag Code Error Value, B–2
Technical Support, 1–2
Terminal Block Adapter, 3–20
Test Menu, 5–25
PLC Enquiry Test: Ethernet Connection, 5–32
PLC Enquiry Test: Serial Connection, 5–30
Serial Port Test, 5–29
Test Beep/Sound, 5–33
Test Communication Ports: Ethernet, 5–31
Test Communication Ports: Serial, 5–28
Test Display, 5–27
Test Touch Panel, 5–26
Troubleshooting
Data not Logging Problems, 8–23
Difficulty Connecting to the Panel over the Internet, 8–20
Internet Access, 8–20
Remote Access, 8–20
Display is Blank, 8–5
Display is Dim, 8–6
Electrical Noise Problems, 8–24
IP Address in System Setup Screens displays 0.0.0.0, 8–19
Loss of Date/Time and Retentive Data, 8–24
No Communications between Panel and PC, 8–8
No Communications between Panel and PLC, 8–16
No User Program, 8–7
Panel Constantly Displays “Initializing” when Powering up, 8–23
PLC Protocol Error Codes, 8–21
Toubleshooting Flow Chart, 8–3
Touch Panel does not Power up, 8–4
Touch Panel Runtime Errors, 8–22
USB Driver Troubleshooting, 8–10

U

USB Programming Cable, 1–14

W

WARNING, 3–4
WAV File Specifications, 2–23
Web server, 1–4
Wiring Guidelines, 4–12

Automation
Direct